PURE WATER FOR LIFE

WITH STAINLESS STEEL

Submersible pumps | High-tech solutions

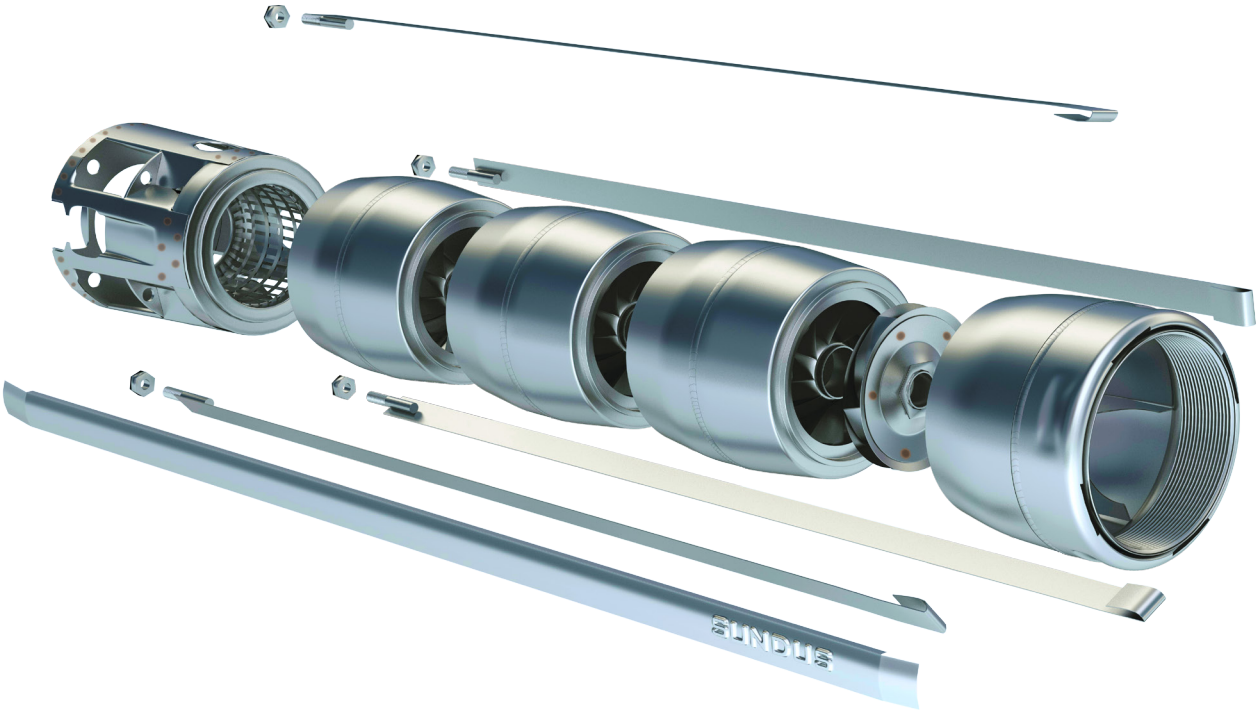

INTRODUCTION

Sandus pump's is one of the top-notch manufacturer's of Stainless Steel Submersible Pumps & Motors. Our focus is to identify and provide a wide range of products for water supply and liquid transfer applications with high duty points from 1 to 120 m^3 /h manufactured distinctively for individuals with varied technical skills.

MANUFACTURING

Sandus Pump's has remarkably developed as a key player to serve its clients in various countries as a multi-national supplier since 1995. We have not only created a niche demand around the world for our cutting-edge products but also achieved the global requirements in terms of design and manufacturing for our stainless steel submersible pumps & motors. These high end products are created by seeking global solutions to fortify economies of scale in production which eventually has resulted into higher quality, low life cost and superior cost efectiveness. The fundamental notion behind the manufacturing facility is that, it is equipped with extensive capital equipment's and machinery needed to minimize manufacturing costs as well as maintaining quality of the highest standards. Sandus exhibits heavy investment in state-of-art manufacturing.

CUSTOMER SATISFACTION

In today's situation, the customer has multiple alternatives to choose; out of which Sandus pumps has been a habitual and favoured company with an outstanding evidence for customer satisfaction. We believe in the phrase 'Customer Is the King' and hence our core proposition is to provide the customers with products and services of top-grade quality at an economical price.

LOW INSTALLATION COST

Stainless steel implies light weight and self-balanced hydraulic parts which safeguards higher efficiency with a comparatively small motor and corrosion resistant which means it provides prolonged running of the pump in spite of non-stop usage. We also provide cost-effective prices by matching the cost of a modern stainless steel pump to the price of major over-haul expenses of a traditional cast iron or plastic pump.

CONTENTS

PERFORMANCE RANGE

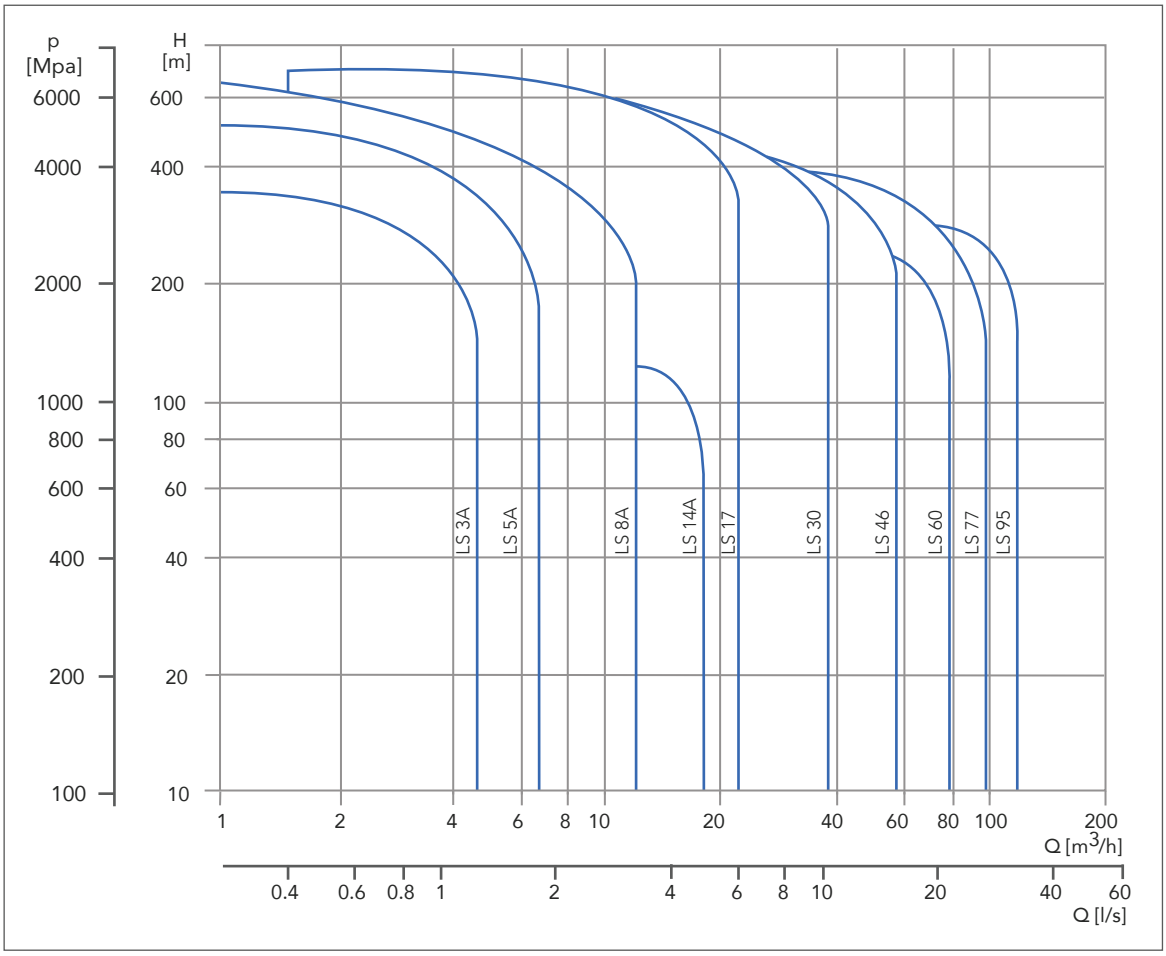

Sandus ® Pumps reserves the right to make modifications without prior notice.
All specifications are subject to change.

1 RAW WATER SUPPLY

2 GROUNDWATER SUPPLY

3 SPRINKLER INSTALLATION

4 WATER TREATMENT

5 IRRIGATION SYSTEM

6 COOLING WATER TRANSPORT

7 BOOSTER SETS

8 FIRE FIGHTING

9 MARINE APPLICATIONS

10 CHEMICAL INDUSTRY

FEATURES

SUBMERSIBLE PUMPS
LSA,LS

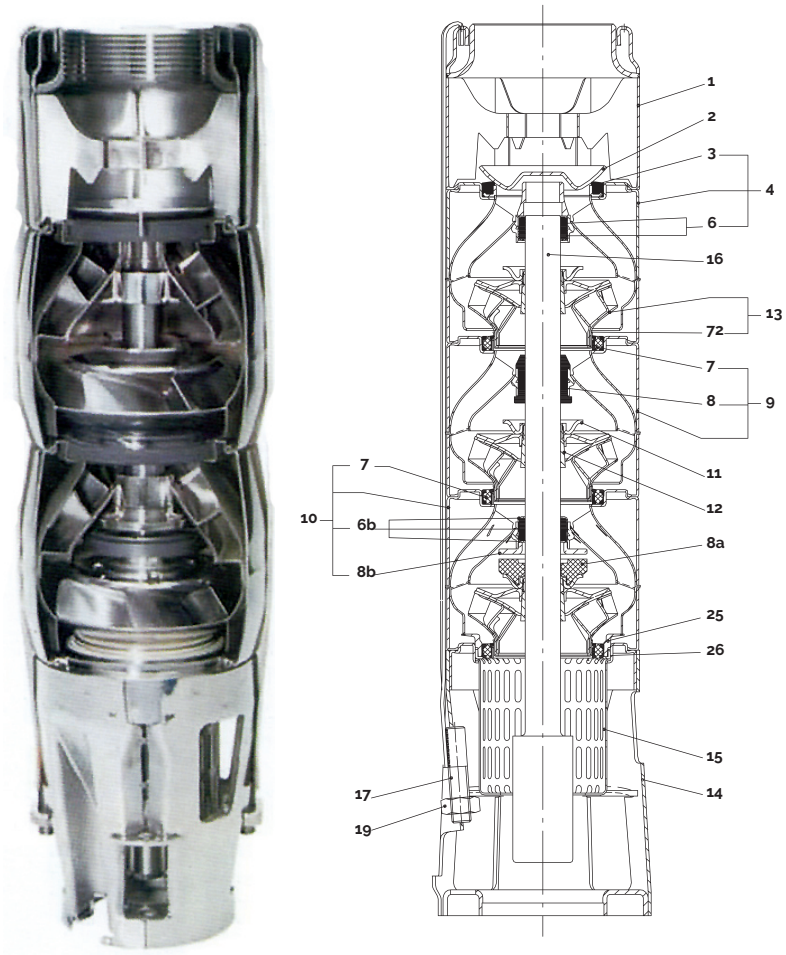

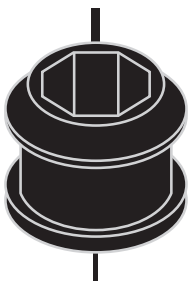

Bearing with
Sand Channels

Priming
Screw

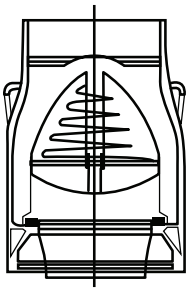

Non-Return
Valve

Inlet
Strainer

SUBMERSIBLE PUMPS
LSA,LS

POS	Components	Materials	Standard		N Version	
			W.-Nr.	AISI	W.-Nr.	AISI
1	Valve Casing	Stainless Steel	1.4301	304	1.4401	316
2	Valve Cup	Stainless Steel	1.4301	304	1.4401	316
3	Valve Seat	Stainless Steel / NBR	1.4301	304	1.4401	316
4	Top Intermediate Chamber	Stainless Steel	1.4301	304	1.4401	316
6	Top Bearing	Stainless Steel / NBR	1.4401	316	1.4401	316
6b	Lower Bearing	Stainless Steel / NBR	1.4401	316	1.4401	316
7	Neck Ring	NBR / PPS				
8	Intermediate Bearing	NBR				
8a	Spacing Washer for Stop Ring	Carbon / Graphite Teflon				
8b	Stop Ring	Stainless Steel	1.4401	316	1.4401	316
9	Intermediate Chamber	Stainless Steel	1.4301	304	1.4401	316
10	Bottom Intermediate Chamber with Stop Ring	Stainless Steel	1.4301 1.4401	304 316	1.4401	316
11	Nut for Split Cone	Stainless Steel	1.4301	304	1.4401	316
11c	Nut for Stop Ring	Stainless Steel	1.4401	304	1.4401	316
12	Split Cone	Stainless Steel	1.4301	304	1.4401	316
13	Impeller	Stainless Steel	1.4301	304	1.4401	316
14	Suction Inter Connector	Stainless Steel	1.4301	304	1.4401	316
15	Strainer	Stainless Steel	1.4301	304	1.4401	316
16	Shaft	Stainless Steel	1.4057	431	1.4460	329
17	Strap	Stainless Steel	1.4301	304	1.4401	316
19	Nut for Strap	Stainless Steel	1.4401	316	1.4401	316
24	Coupling	Stainless Steel	1.4460	329	1.4460	329
72	Wear Ring	Stainless Steel	1.4301	304	1.4401	316

TYPE KEY

Example

Type range [LSA. LS] —— LS
Nominal flow rate in m ^{3}/h —— 46
Number of impellers —— 10

Operating Conditions and Pumped Liquids

Flow rate. Q: Pump series LSA. LS from 0.1-120 m^3/h
Head. H: Maximum 670m.
Maximum permissible quantity of suspended sand 50 g/m^3

Maximum Liquid Temperature

Motor	Installation		
	Flow velocity past motor	Vertical	Horizontal
Sandus SRM 4" 6"	0.15 m/s	40°c	40°c

Maximum operating pressure 6 Mpa. [60 bar]

Curve Conditions

The Conditions below apply to the curves shown on pages: 9,13,17,21,26,27,32,33,38,39,44,45,50,51,56 & 57.

General

Curves tolerences according to ISO 9906, Annex A.
The performance curves shows pump performance at actual speed cf. standard motor range.
The speed of the motors is approximately:

4" motor : n = 2870 min-1
6" motor : n = 2870 min-1
8" motor : n = 2900 min-1

The measurements were made with airless water at a temperature of 20°C. The curves apply to a kinematic viscosity of 1mm^2. When pumping liquids with a density higher than that of water, motors with correspondingly higher outputs must be used.

The bold curves indicates the recommended performance range.The performance curves are inclusive if possible losses such as non-return valve loss.

LS A Curver

Q/H: The curves are inclusive of valve and inlet losses at the actual speed.

Efficiency Curve: Eta shows pump stage efficiency.

LS Curver

Q/H: The curves are inclusive of valve and inlet losses at the actual speed. Operation without non-return valve will increase the actual head at nominal performance by 0.5 to 1.0m.

NPSH: The curves are inclusive of suction interconnector and shows required inlet pressure.

Efficiency Curve: Eta shows pump stage efficiency.

Pump Range

Type	LS 3A	LS 5A	LS 8A	LS 14A	LS 17	LS 30	LS 46	LS 60	LS 77	LS 95
Steel: DIN 1.4301 AISI 304	+	+	+	+	+	+	+	+	+	+
Steel: DIN 1.4401 AISI 314	+	+	+	+	+	+	+	+	+	+
Connection*	Rp 1 1/4	Rp 1 1/2 [R 1 1/2]	Rp 2 [R 2]	Rp 2	Rp 2 1/2 [R 3]	Rp 3 [R 3]	Rp 3 Rp 4 [R 4]	Rp 3 Rp 4	Rp 5	Rp 5
Flange connection: Sandus Flange									5"	5"

SRM 4S 6T

4″ Submersible rewindable motor 1 x 230 V 50 Hz

Motor			Full-load current I_n[A]	Motor Efficiency %			Power Factor			Motor R.P.M	Capacitor if	Ist/In	Axial Thrust N	Length [mm]	Weight [kg]
Type	Power [kW]	Power HP		2/4	3/4	4/4	Cos 2/4	Cos 3/4	Cos 4/4						
SRM 4S	0.37	0.5	3.8	48	54	57	0.58	0.68	0.77	≈2870	16	3.4	1500	370	11
SRM 4S	0.55	0.75	5.2	49	56	59	0.51	0.64	0.73		25	3.6		405	13
SRM 4S	0.75	1	6.7	53	58	60.5	0.56	0.68	0.78		30	3.7		450	15
SRM 4S	1.1	1.5	8.3	61	68.5	71.5	0.98	0.98	0.98		40	4.4		505	18
SRM 4S	1.5	2	10.6	56	66	71	0.9	0.95	0.97		50	4		545	20
SRM 4S	2.2	3	15.8	65.5	72.5	74.5	0.9	0.94	0.96		70	4.6		645	24

4″ Submersible rewindable motor 3 x 400 V 50 Hz

Motor			Full-load current I_n[A]	Motor Efficiency %			Power Factor			Motor R.P.M	Ist/In	Axial Thrust N	Length [mm]	Weight [kg]
Type	Power [kW]	Power HP		2/4	3/4	4/4	Cos 2/4	Cos 3/4	Cos 4/4					
SRM 4S	0.37	0.5	1.1	51	51.5	64	0.44	0.55	0.64	≈2870	3.8	1500	370	11
SRM 4S	0.55	0.75	1.7	49.5	58	65	0.41	0.51	0.63		3.4		370	11
SRM 4S	0.75	1	2.2	65	70	73.5	0.51	0.63	0.73		4.8		430	14
SRM 4S	1.1	1.5	3	64	70	75	0.98	0.6	0.72		4.6		455	15
SRM 4S	1.5	2	4.1	67.5	73.5	75.5	0.51	0.65	0.76		5.1		505	18
SRM 4S	2.2	3	5.8	72	75	75.5	0.55	0.71	0.81		4.5		545	20
SRM 4S	3	4	8	71	74	75	0.53	0.67	0.77		4.6		645	24
SRM 4S	4	5.5	9.8	77	78	77.5	0.56	0.7	0.8		5	4500	715	27
SRM 4S	5.5	7.5	14.1	78	79	78	0.56	0.71	0.8		4.9		795	31

6″ Submersible rewindable motor 3 x 400 V 50 Hz

Motor			Full-load current I_n[A]	Motor Efficiency %			Power Factor			Motor R.P.M	Ist/In	Axial Thrust N	Length [mm]	Weight [kg]
Type	Power [kW]	Power HP		2/4	3/4	4/4	Cos 2/4	Cos 3/4	Cos 4/4					
SRM 6T	5.5	7.5	13.8	74.5	76	74	0.62	0.74	0.8	≈2870	4.5	20000	745	53
SRM 6T	7.5	10	16.4	78.5	77	76.5	0.61	0.77	0.8		4.3		827	61
SRM 6T	9.2	12.5	21.6	76.5	78	76	0.63	0.74	0.81		4.7		875	66
SRM 6T	11	15	24.1	78.5	79.5	78	0.64	0.76	0.8		4.8		940	72
SRM 6T	13	17.5	28.5	81	82.5	80	0.65	0.76	0.81		4.8		977	77
SRM 6T	15	20	32	82	81.5	80.5	0.67	0.79	0.82		5		1029	82
SRM 6T	18.5	25	40.1	83.5	85	84.2	0.64	0.77	0.82		5.3		1090	90
SRM 6T	22	30	47.6	83.5	84.7	83.8	0.65	0.77	0.82		5.1		1132	100
SRM T	26	35	55.1	85	86	84	0.69	0.8	0.82		4.9		1182	115

NEMA Mounting Dimensions (mm)

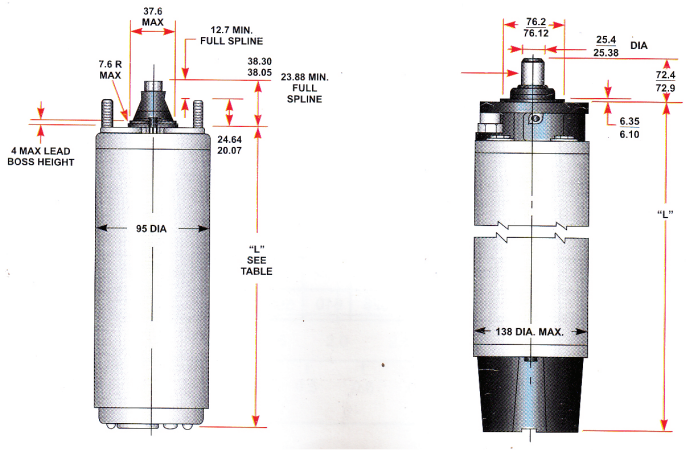

*Serious or fatal electrical shock or fire hazard may result from failure to follow the instructions for proper installation and use which accompany this equipment. *Do not use motor in swimming areas.

LS 3A

Component name

1	Valve casing complete
2	Valve cup
3	Valve seat
6	Bearing, top
7	Neck ring
8	Bearing ring
9	Chamber complete
10	Chamber, bottom

13	Impeller
14	Suction interconnector
16	Pump shaft
17	Strap
18	Cable guard
19	Screw
64	Priming disc
70	Valve guide

71	Washer
76	Washer
78	Nameplate
1.b	Discharge piece
18.a	Screw
19.b	Nut
19.b	Lock nut

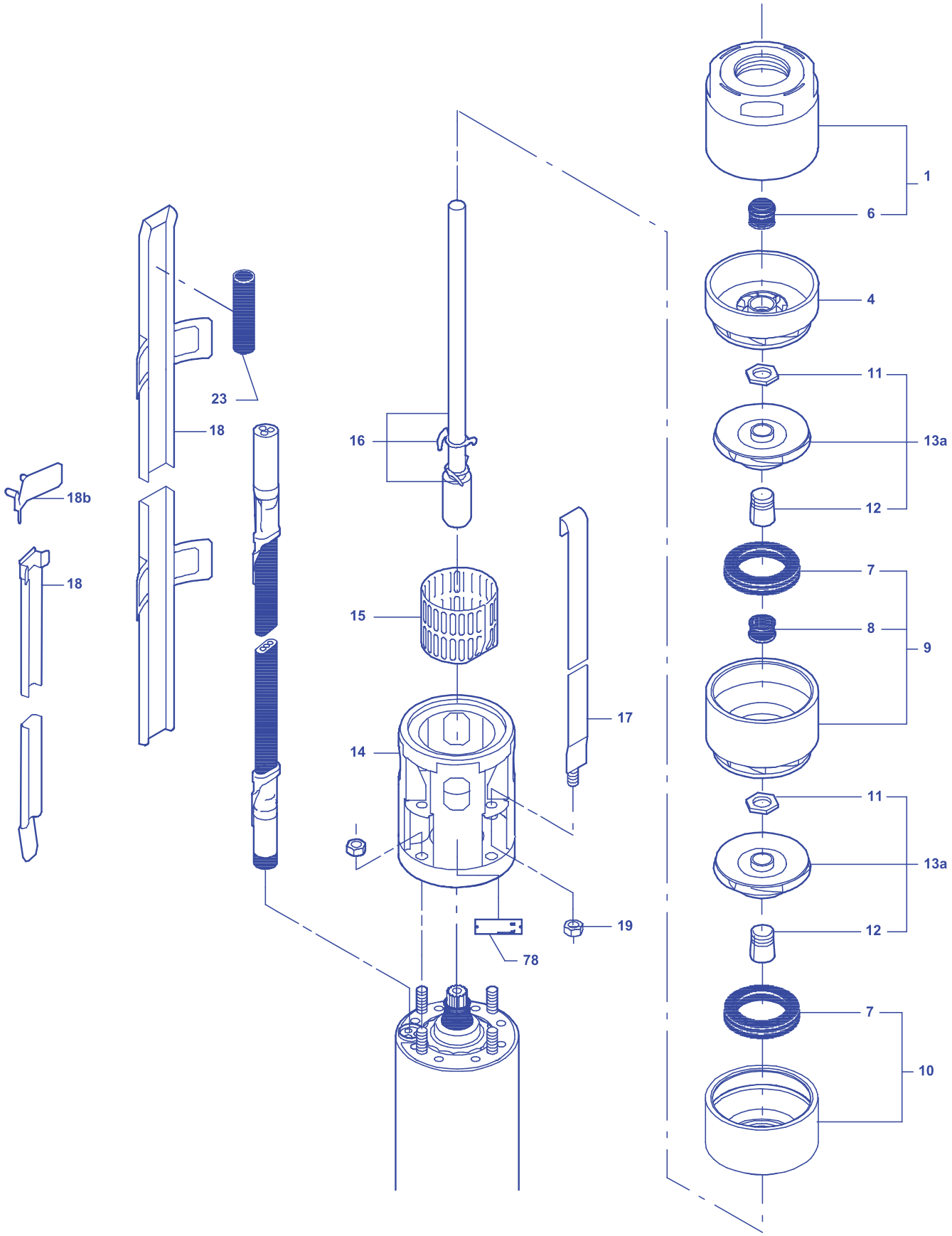
1
6
4
11
13a
12
7
8
9
11
13a
12
7
10
23
18
18b
18
16
15
14
17
19
78

TECHNICAL DATA & SELECTION CHART

SUBMERSIBLE PUMP
LS 3A

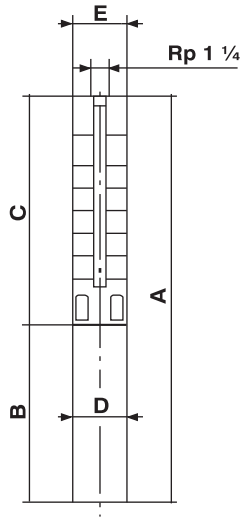

Dimensions & Weights														
Pump Type	Motor		Dimensions [mm]										Net Weight [Kg]	
	Type	Power [kW]	C	B		A		Weight [Kg]			D	E		
									Motor					
				1x230V	3x230V 3x400V	1x230V	3x230V 3x400V	Pump	1x230V	3x230V 3x380V			1x230V	3x230V 3x400V
LS 3A - 6	SRM 4S	0.37	281	370	370	651	651	2.7	11	11	95	101	14	14
LS 3A - 9	SRM 4S	0.55	344	405	370	749	714	3.3	13	11	95	101	16	14
LS 3A - 12	SRM 4S	0.75	407	450	430	857	837	4	15	14	95	101	19	18
LS 3A - 15	SRM 4S	1.1	470	505	455	975	925	4.6	18	15	95	101	23	20
LS 3A - 18	SRM 4S	1.1	533	505	455	1038	988	5.3	18	15	95	101	23	20
LS 3A - 22	SRM 4S	1.5	617	545	505	1162	1122	6.1	20	18	95	101	26	24
LS 3A - 25	SRM 4S	1.5	680	545	505	1225	1185	6.8	20	18	95	101	27	25
LS 3A - 29	SRM 4S	2.2	764	645	545	1409	1309	7.6	24	20	95	101	32	28
LS 3A - 33	SRM 4S	2.2	848	645	545	1493	1393	8.4	24	20	95	101	32	28
LS 3A - 39	SRM 4S	3	1019		645		1664	14.7		24	95	101		39
LS 3A - 45	SRM 4S	3	1145		645		1790	16.6		24	95	101		41
LS 3A - 52	SRM 4S	4	1292		715		2007	19		27	95	101		46
LS 3A - 60	SRM 4S	4	1460		715		2175	21.7		27	95	101		49

E= Maximum diameter of pump inclusive of cable guard and motor.

Motor	Pump Type	Flow Q															
		m^3/h		0	1	1.4	1.8	2.2	2.6	3	3.4	4	4.4	5.6	6.4	7.2	7.6
		l/sec		0	0.28	0.39	0.5	0.56	0.67	0.78	0.9	1.12	1.23	1.6	1.8	2	2.1
		l/min		0	16.7	23.4	30.1	37	43	50	57	67	73	93	107	120	127
		Power		Head H [Meter]													
		[kW]	[HP]														
4"	LS 3A - 6	0.37	0.5	37.7	34.9	33.7	32.5	31.2	29.7	25.7	22.1	15.2	10.3				
	LS 3A - 9	0.55	0.75	56.7	52.5	50.6	48.6	46.1	42.9	38.7	33.3	23	15.3				
	LS 3A - 12	0.75	1	75.7	70.2	67.8	65.1	61.8	57.6	52	44.9	31.1	21				
	LS 3A - 15	1.1	1.5	95	88.3	85.3	82	77.9	72.7	66	57.1	39.8	27				
	LS 3A - 18	1.1	1.5	113	105	101	97.2	92.2	85.8	77.4	66.8	46.1	30.2				
	LS 3A - 22	1.5	2	139	129	125	120	114	106	95.6	82.8	57.6	37.7				
	LS 3A - 25	1.5	2	157	146	140	135	128	119	107	92.3	63.6	41.3				
	LS 3A - 29	2.2	3	184	171	166	159	152	142	128	111	98.1	53.1				
	LS 3A - 33	2.2	3	209	194	187	180	171	159	144	125	87.2	58.9				
	LS 3A - 39	3	4	246	230	223	216	207	195	180	160	121	89.7				
	LS 3A - 45	3	4	283	263	255	247	236	222	204	181	135	100				
	LS 3A - 52	4	5.5	328	307	298	289	227	261	240	214	162	121				
	LS 3A - 60	4	5.5	377	351	341	330	316	297	273	242	181	136				

SUBMERSIBLE PUMP
LS 3A

According to: ISO 9906 ANNEX A 50Hz 2870 min^{-1}

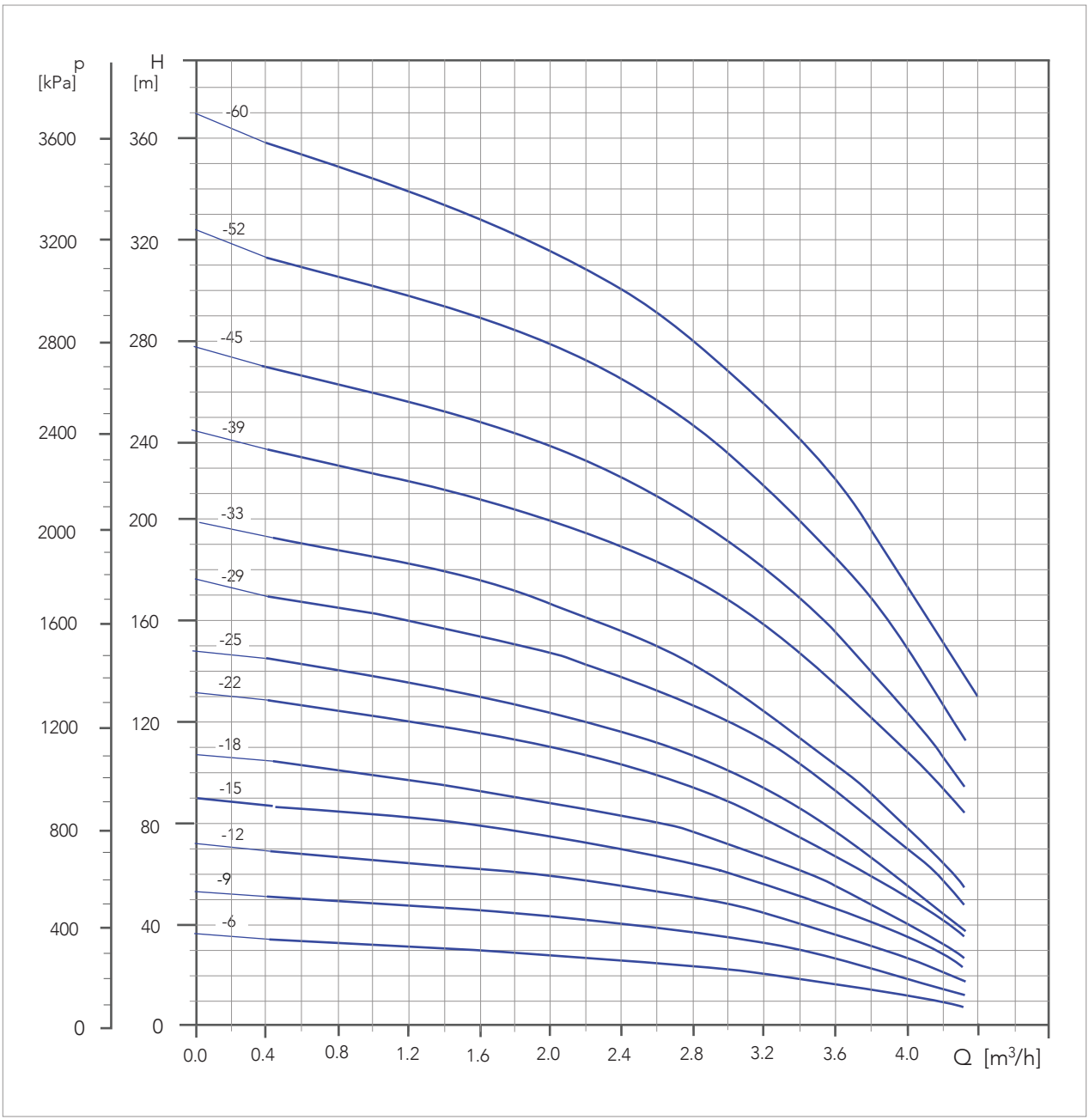

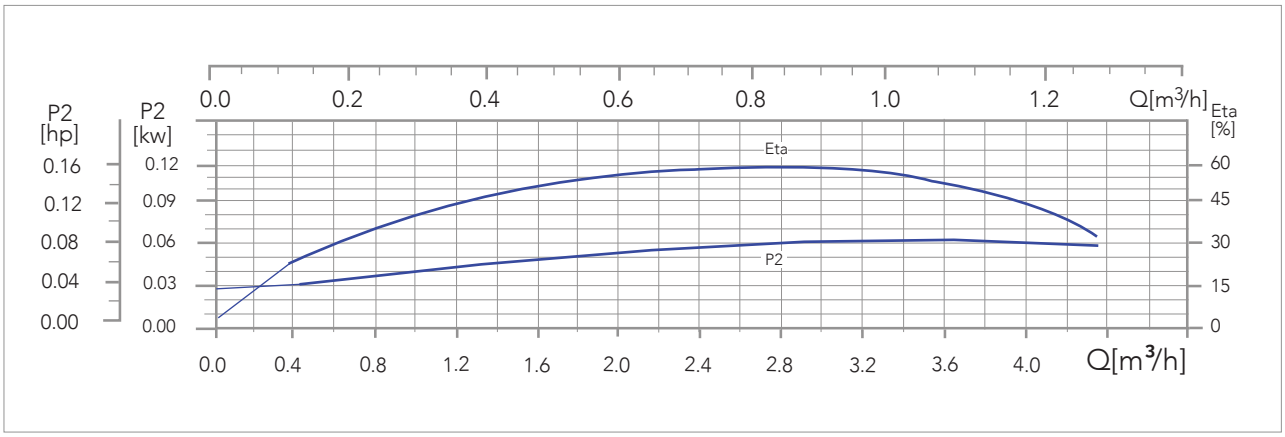

LS 5A

Component name

1	Valve casing complete
2	Valve cup
3	Valve seat
6	Bearing, top
7	Neck ring
8	Bearing ring
9	Chamber complete
10	Chamber, bottom

13	Impeller
14	Suction interconnector
16	Pump shaft
17	Strap
18	Cable guard
19	Screw
64	Priming disc
70	Valve guide

71	Washer
76	Washer
78	Nameplate
1.b	Discharge piece
18.a	Screw
19.b	Nut
19.b	Lock nut

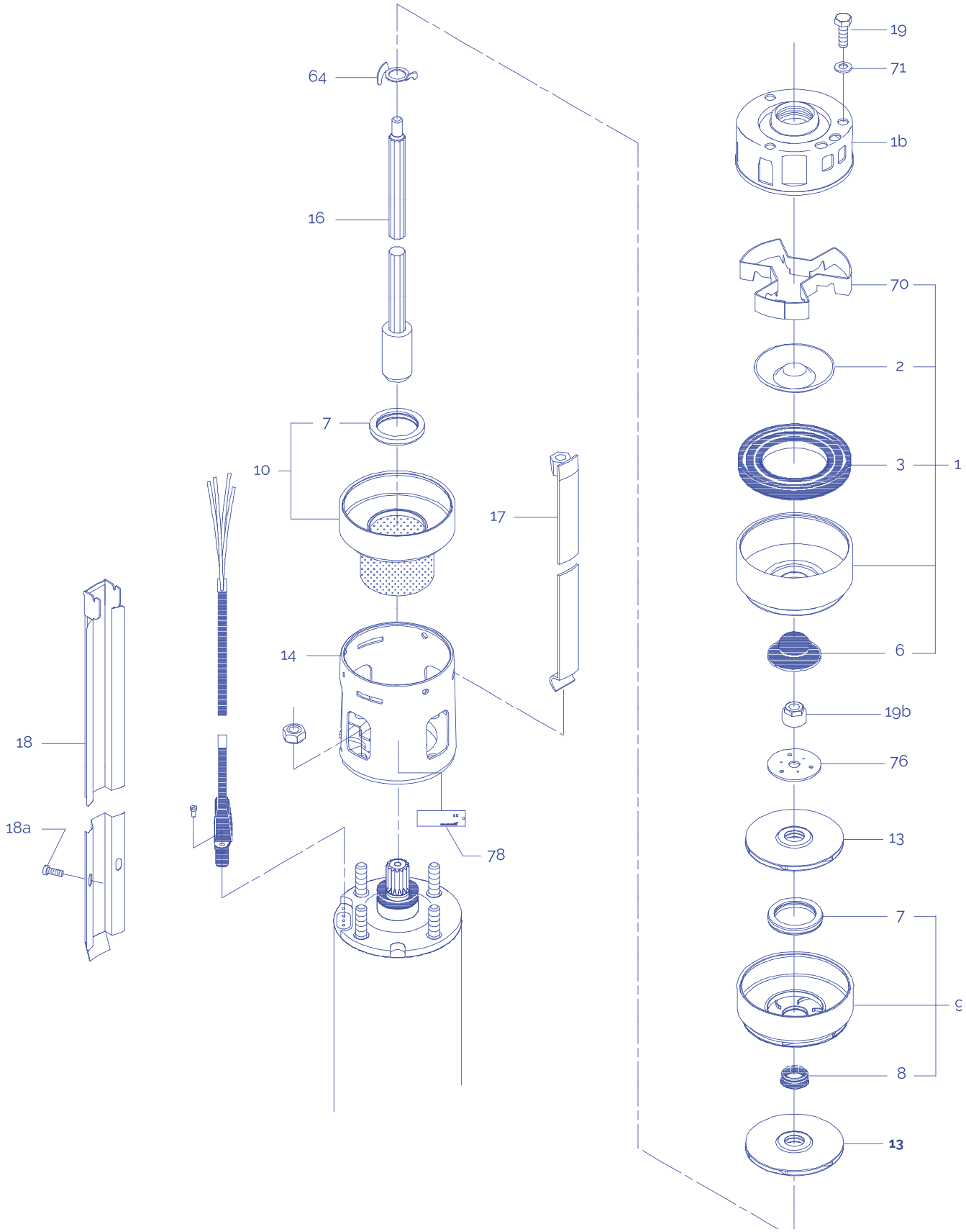
19
71
64
1b
16
70
2
7
3
1
10
17
6
14
19b
18
76
18a
13
78
7
9
8
13

TECHNICAL DATA & SELECTION CHART

SUBMERSIBLE PUMP
LS 5A

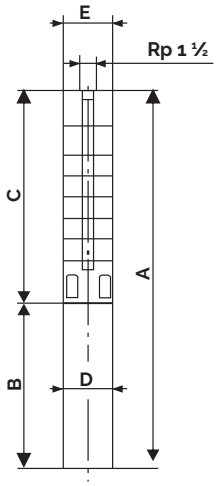

LS 5A-75 and LS-5A-85 are mounted in sleeve for R 1/2 connection.

Dimensions & Weights														
Pump Type	Motor		Dimensions [mm]										Net Weight [Kg]	
	Type	Power [kW]	C	B		A		Weight [Kg]			D	E		
									Motor					
				1x230V	3x230V 3x400V	1x230V	3x230V 3x400V	Pump	1x230V	3x230V 3x400V			1x230V	3x230V 3x400V
LS 5A - 4	SRM 4S	0.37	240	370	370	610	610	2.4	11	11	95	101	13	13
LS 5A - 6	SRM 4S	0.55	282	405	370	687	652	2.8	13	11	95	101	16	14
LS 5A - 8	SRM 4S	0.75	324	450	430	774	754	3.2	15	14	95	101	18	17
LS 5A - 12	SRM 4S	1.1	408	505	455	913	863	4	18	15	95	101	22	19
LS 5A - 17	SRM 4S	1.5	513	545	505	1058	1018	5.1	20	18	95	101	25	23
LS 5A - 21	SRM 4S	2.2	597	645	545	1242	1142	5.9	24	20	95	101	30	26
LS 5A - 25	SRM 4S	2.2	681	645	545	1326	1226	6.8	24	20	95	101	31	27
LS 5A - 33	SRM 4S	3	849		645		1494	8.5		24	95	101		33
LS 5A - 38	SRM 4S	4	998		715		1713	14.7		27	95	101		42
LS 5A - 44	SRM 4S	4	1124		715		1839	16.4		27	95	101		43
LS 5A - 52	SRM 4S	5.5	1292		795		2087	23.9		31	95	101		55
LS 5A - 60	SRM 4S	5.5	1460		795		2255	26.9		31	95	101		58
LS 5A - 75	SRM 6T	7.5	2146		827		2973	47		61	138	140		108
LS 5A - 85	SRM 6T	7.5	2356		827		3183	52.4		61	138	140		113

E= Maximum diameter of pump inclusive of cable guard and motor.

Motor	Pump Type	Flow Q															
		m^3/h		0	1.20	1.6	2.00	2.4	2.8	3.2	3.6	4.2	5	5.8			
		l/sec		0	0.33	0.44	0.55	0.66	0.77	0.88	1	1.16	1.38	1.61			
		l/min		0	20	26.7	33.4	40	46.7	53.3	60	70	83.3	96.7			
		Power		Head H [Meter]													
		[kW]	[HP]														
4"	LS 5A - 4	0.37	0.5	25.6	23.4	22.8	22.2	21.7	21.1	20.4	19.6	18.2	15.8	12.4			
	LS 5A - 6	0.55	0.75	38.4	35.2	34.3	33.4	32.6	31.7	30.7	29.5	27.5	23.8	18.8			
	LS 5A - 8	0.75	1	51.3	47	45.9	44.8	43.7	42.5	41.2	39.7	36.9	32	25.4			
	LS 5A - 12	1.1	1.5	76.8	70.3	68.6	66.9	65.2	63.4	61.4	59.1	55	47.6	37.6			
	LS 5A - 17	1.5	2	109	99.4	96.9	94.4	92	89.4	86.6	83.4	77.4	66.9	52.8			
	LS 5A - 21	2.2	3	135	124	121	118	115	112	109	105	97.9	85.1	67.8			
	LS 5A - 25	2.2	3	160	147	143	139	136	132	128	123	115	99.3	78.6			
	LS 5A - 33	3	4	211	193	188	183	179	174	168	162	151	130	103			
	LS 5A - 38	4	5.5	250	230	224	219	213	208	201	194	181	157	125			
	LS 5A - 44	4	5.5	281	258	251	245	239	232	225	217	201	174	138			
	LS 5A - 52	5.5	7.5	334	307	300	293	286	278	270	260	242	211	168			
	LS 5A - 60	5.5	7.5	384	352	343	335	327	318	308	297	276	239	189			
6"	LS 5A - 75	7.5	10	480	440	429	419	408	397	385	371	345	299	237			
	LS 5A - 85	7.5	10	543	496	483	471	459	446	432	415	386	333	262			

SUBMERSIBLE PUMP
LS 5A

According to: ISO 9906 ANNEX A 50Hz 2870 min^{-1}

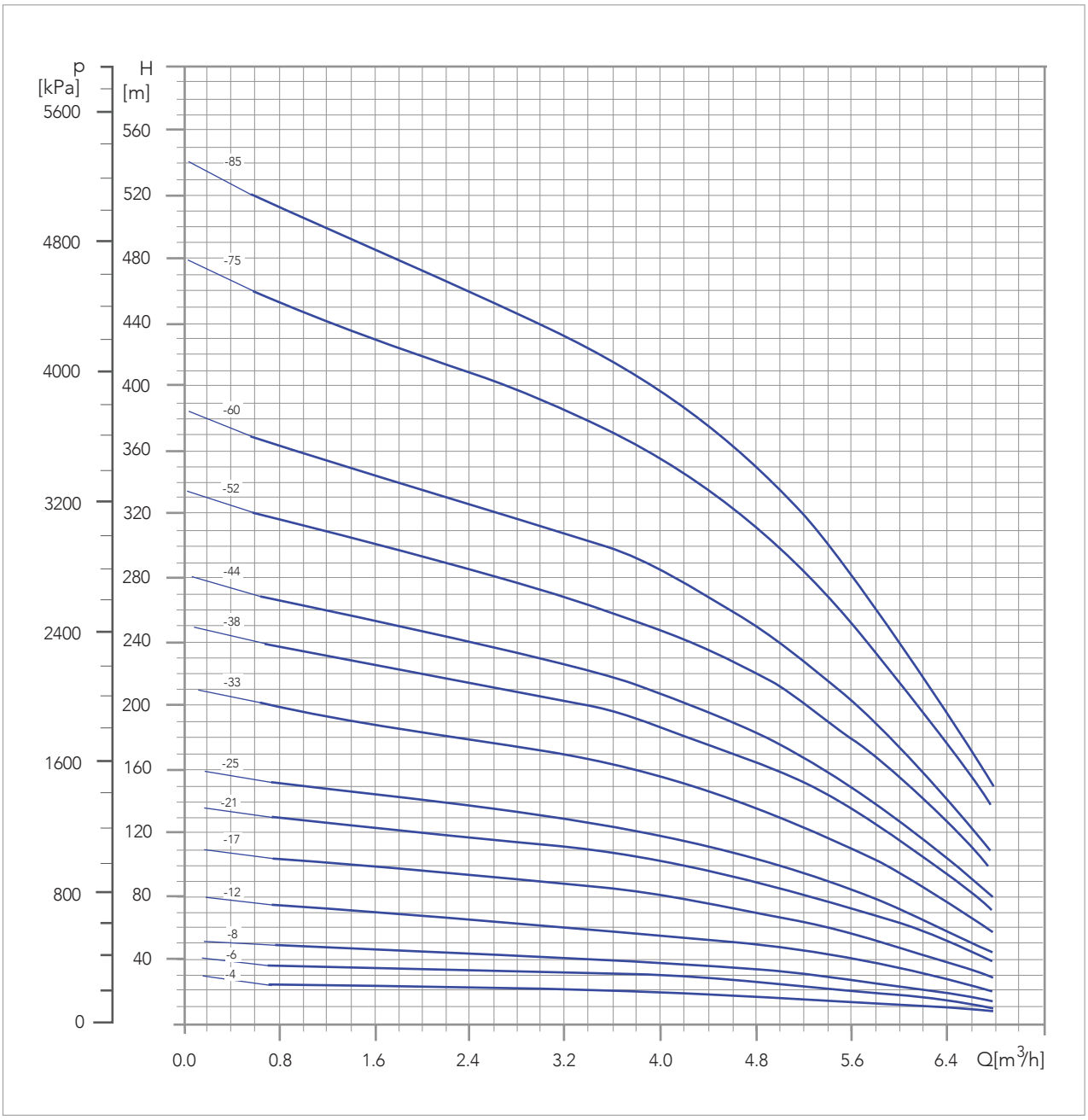

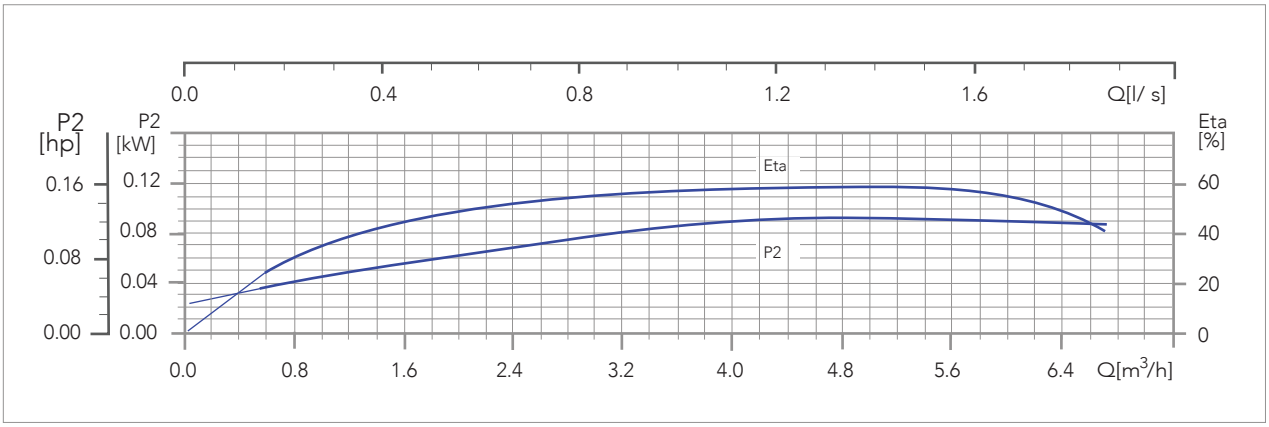

LS 8A

Component name

1	Valve casing complete
4	Chamber, top
6	Bearing, top
7	Neck ring
8	Bearing
9	Chamber complete

10	Chamber
11	Split cone nut
12	Split cone
14	Suction interconnector
15	Strainer
16	Pump shaft

17	Strap
18	Cable guard
19	Nut
78	Nameplate
13.a	Impeller complete

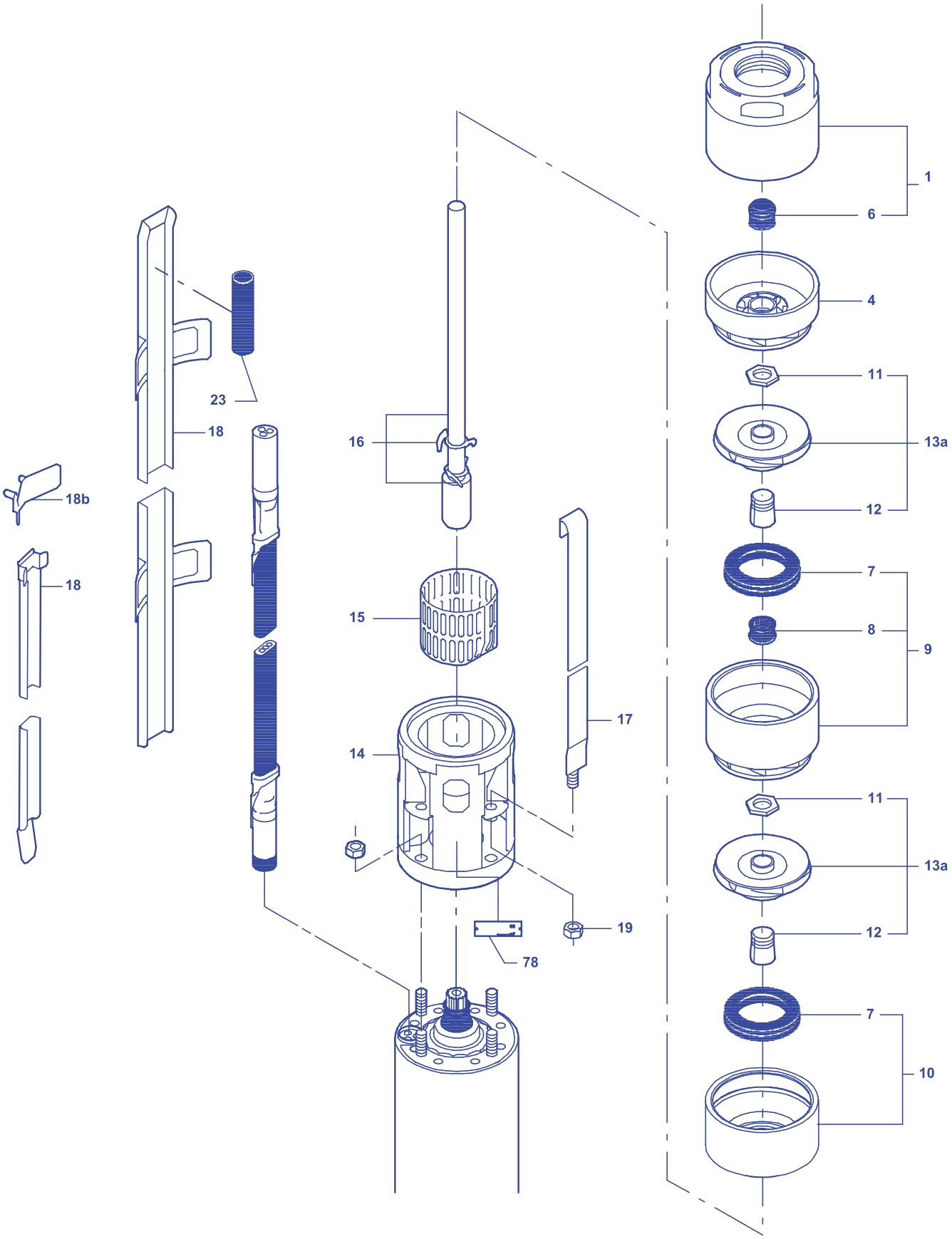
1
6
4
11
13a
12
7
8
9
11
13a
12
7
10
23
18
18b
18
16
15
14
17
19
78

TECHNICAL DATA & SELECTION CHART

SUBMERSIBLE PUMP
LS 8A

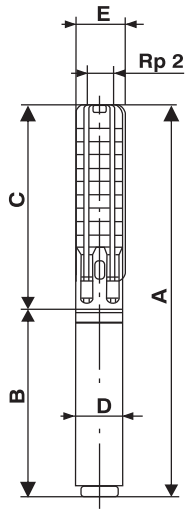

Dimensions & Weights														
Pump Type	Motor		Dimensions [mm]										Net Weight [Kg]	
	Type	Power [kW]	C	B		A		Weight [Kg]			D	E		
									Motor					
				1x230V	3x230V 3x400V	1x230V	3x230V 3x400V	Pump	1x230V	3x230V 3x400V			1x230V	3x230V 3x400V
LS 8A - 5	SRM 4S	0.75	409	450	430	859	839	5.3	15	14	95	101	20	19
LS 8A - 7	SRM 4S	1.1	493	505	455	998	948	6.3	18	15	95	101	24	21
LS 8A - 10	SRM 4S	1.5	619	545	505	1164	1124	8	20	18	95	101	28	26
LS 8A - 12	SRM 4S	2.2	703	645	545	1348	1248	8.6	24	20	95	101	33	29
LS 8A - 15	SRM 4S	2.2	829	645	545	1474	1374	10.2	24	20	95	101	34	30
LS 8A - 18	SRM 4S	3	955		645		1600	11.6		24	95	101		36
LS 8A - 21	SRM 4S	4	1081		715		1796	13.2		27	95	101		40
LS 8A - 25	SRM 4S	4	1249		715		1964	15.4		27	95	101		42
LS 8A - 30	SRM 4S	5.5	1459		795		2254	18.2		31	95	101		49
LS 8A - 37	SRM 4S	5.5	1753		795		2548	22		31	95	101		53
LS 8A - 44	SRM 6T	7.5	2051		827		2878	27		61	138	140		88
LS 8A - 50	SRM 6T	7.5	2361		827		3188	31		61	138	140		92
LS 8A - 58	SRM 6T	9.2	3013		875		3888	59		66	138	140		125
LS 8A - 66	SRM 6T	11	3349		940		4289	66		72	138	140		138
LS 8A - 73	SRM 6T	11	3643		940		4583	72		72	138	140		144
LS 8A - 82	SRM 6T	13	4021		977		4998	80		77	138	140		157
LS 8A - 91	SRM 6T	15	4399		1029		5428	88		82	138	140		170
LS 8A - 100	SRM 6T	15	4777		1029		5806	95		82	138	140		177
LS 8A - 110	SRM 6T	18.5	5197		1090		6287	104		90				194

E= Maximum diameter of pump inclusive of cable guard and motor.

Motor	Pump Type	Flow Q															
		m^3/h		0	5	6	7	8	9	10	11	12	14	16	18	20	21
		l/sec		0	1.4	1.7	1.9	2.2	2.5	2.8	3.1	3.3	3.9	4.4	5	5.6	5.8
		l/min		0	83	100	117	133	150	167	183	200	233	267	300	333	350
		Power		Head H [Meter]													
		[kW]	[HP]														
4"	LS 8A - 5	0.75	1	30	24.2	23.2	22.2	20.8	18.7	15.7	12.3	11.3					
	LS 8A - 7	1.1	1.5	42	33.8	32.5	31	29.1	26.1	22	17.2	15.8					
	LS 8A - 10	1.5	2	59.9	48.1	46.2	44.1	41.3	37	31.2	24.3	22.3					
	LS 8A - 12	2.2	3	72.3	58.8	56.6	54.2	50.9	45.9	39	30.6	28.1					
	LS 8A - 15	2.2	3	89.9	72.4	69.5	66.4	62.2	55.9	47.1	36.8	33.8					
	LS 8A - 18	3	4	108	87.2	83.7	80.1	75	67.5	57	44.5	40.9					
	LS 8A - 21	4	5.5	127	103	98.9	94.1	89	80.3	68.1	53.5	49.2					
	LS 8A - 25	4	5.5	150	121	116	111	104	93.6	79	61.7	56.7					
	LS 8A - 30	5.5	7.5	180	145	138	132	123	110	92	71.1	64.9					
	LS 8A - 37	5.5	7.5	221	176	168	159	148	132	110	84.3	76.8					
6"	LS 8A - 44	7.5	10	263	210	201	190	177	158	132	101	92.4					
	LS 8A - 50	7.5	10	298	236	225	214	198	176	147	112	102					
	LS 8A - 58	9.2	12.5	346	275	263	249	231	206	172	131	120					
	LS 8A - 66	11	15	394	314	300	285	264	236	196	151	137					
	LS 8A - 73	11	15	435	344	329	312	289	257	213	163	149					
	LS 8A - 82	13	15	489	389	372	353	328	292	243	187	184					
	LS 8A - 91	15	20	544	434	415	394	366	327	273	210	217					
	LS 8A - 100	15	20	596	474	452	429	398	354	295	226	224					
	LS 8A - 110	18.5	25	658	527	504	479	446	398	333	256	234					

SUBMERSIBLE PUMP
LS 8A

According to: ISO 9906 ANNEX A 50Hz 2870 min^{-1}

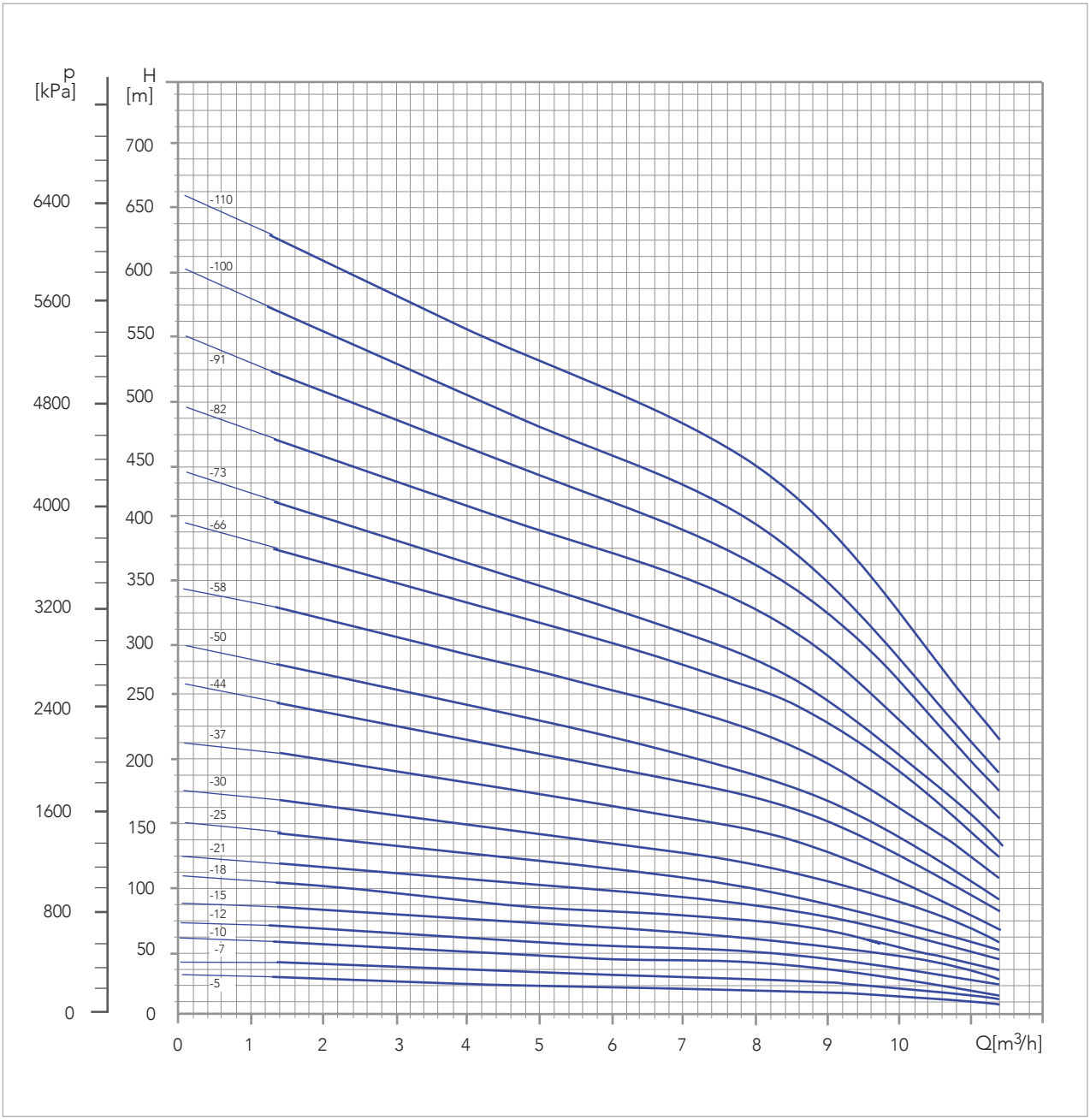

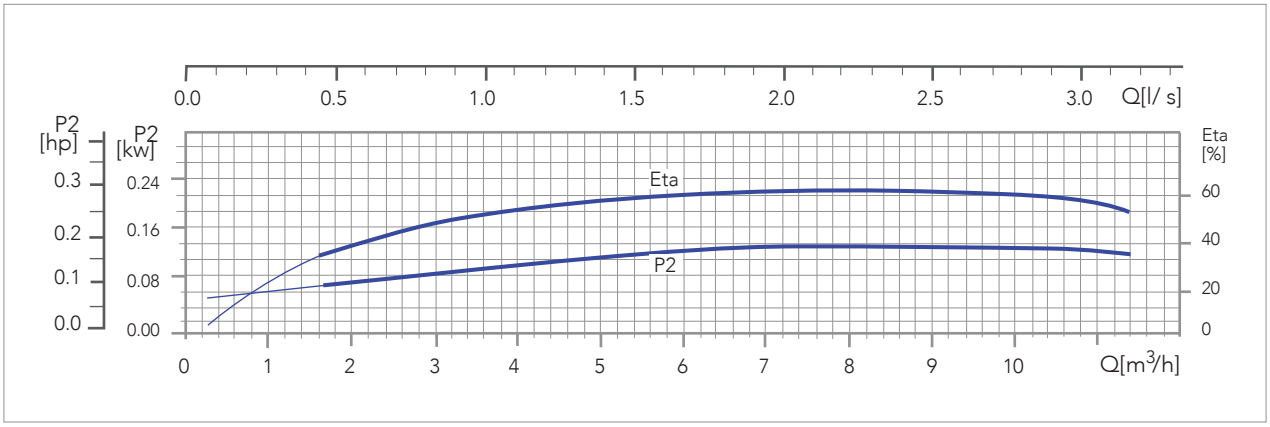

LS 14A

Component name

1	Valve casing complete
3	Valve seat
4	Chamber, top
6	Bearing, top
7	Neck ring
8	Bearing ring
9	Chamber

11	Split cone nut
12	Split cone
14	Suction interconnector
15	Strainer
16	Pump shaft
17	Strap
18	Cable guard

19	Nut
25	Guide complete
78	Nameplate
85	Stop ring
13.a	Impeller complete

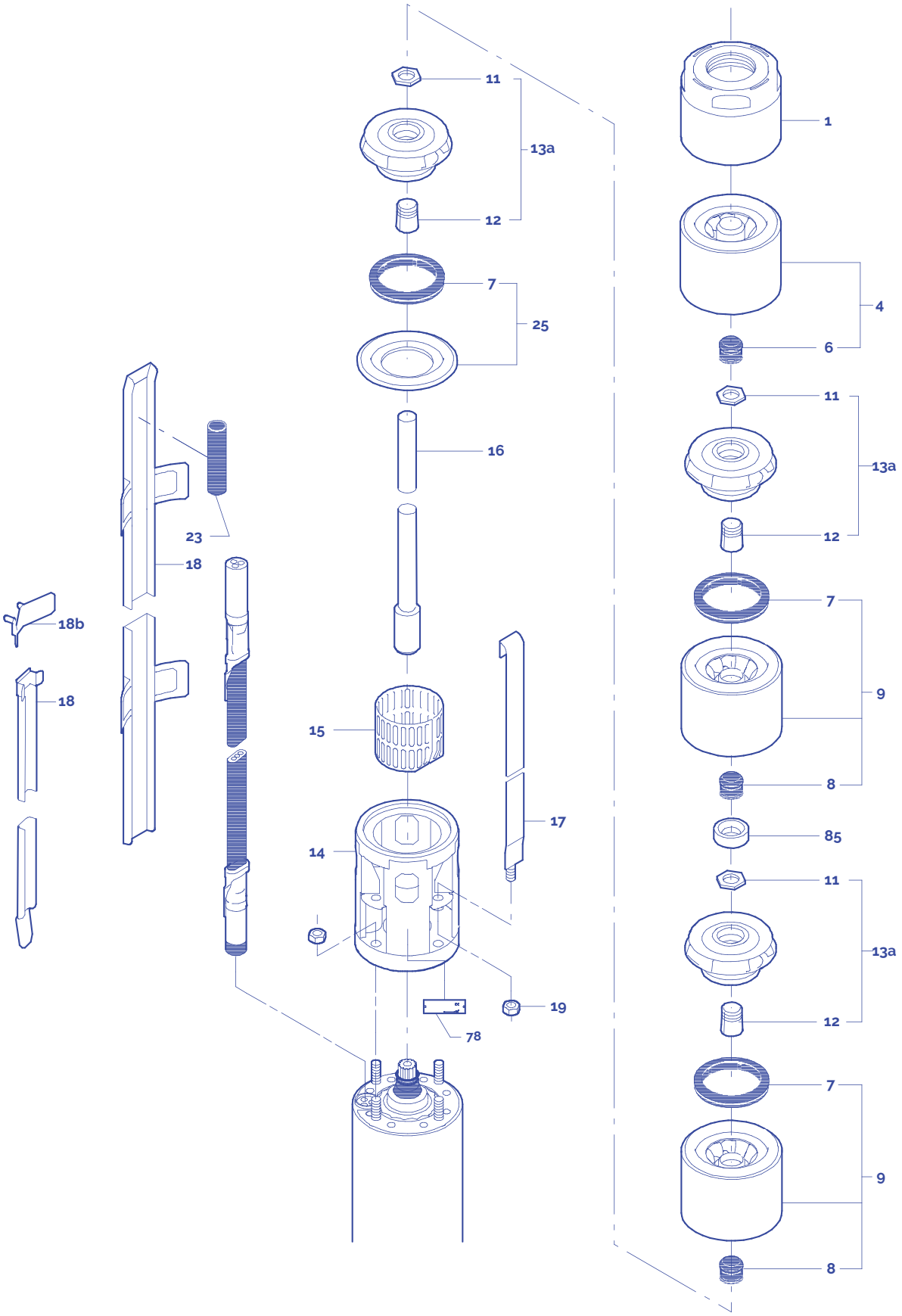
11
13a
12
7
25
16
23
18
18b
18
15
14
17
19
78
1
4
6
11
13a
12
7
9
8
85
11
13a
12
7
9
8

TECHNICAL DATA & SELECTION CHART

SUBMERSIBLE PUMP
LS 14A

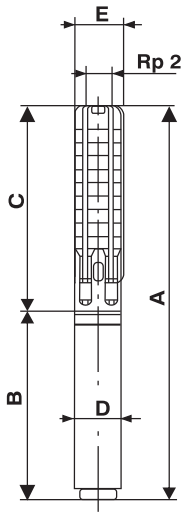

Dimensions & Weights														
Pump Type	Motor		Dimensions [mm]										Net Weight [Kg]	
	Type	Power [kW]	C	B		A		Weight [Kg]			D	E		
									Motor					
				1x230V	3x230V 3x400V	1x230V	3x230V 3x400V	Pump	1x230V	3x230V 3x400V			1x230V	3x230V 3x400V
LS 14A-5	SRM 4S	1.5	510	545	505	1055	1015	6.1	20	18	95	101	26	24
LS 14A-7	SRM 4S	2.2	640	645	545	1285	1185	7	24	20	95	101	31	27
LS 14A-10	SRM 4S	3	835		645		1480	9.1		24	95	101		33
LS 14A-13	SRM 4S	4	1030		715		1745	11.3		27	95	101		38
LS 14A-18	SRM 4S	5.5	1355		795		2150	14.3		31	95	101		45
LS 14A-25	SRM 6T	7.5	1872		827		2699	18.5		61	138	138		80

E= Maximum diameter of pump inclusive of cable guard and motor.

Motor	Pump Type	Flow Q															
		m^3/h		0	5	6	7	8	9	10	11	12	14	16	18	20	21
		l/sec		0	1.4	1.7	1.9	2.2	2.5	2.8	3.1	3.3	3.9	4.4	5	5.6	5.8
		l/min		0	83	100	117	133	150	167	183	200	233	267	300	333	350
		Power		Head H [Meter]													
		[kW]	[HP]														
4"	LS 14A-5	1.5	2	32.9	32.1	31.2	30.5	29.7	28.9	28	27	25.9	23	19	14.1	12.1	
	LS 14A-7	2.2	3	46.2	45.2	44.1	43	41.9	40.8	39.6	38.2	36.7	32.6	27.1	20.3	17.7	
	LS 14A-10	3	4	65.7	64.2	62.6	61	59.4	57.7	56	54	51.7	45.9	37.9	28.2	24.6	
	LS 14A-13	4	5.5	85.6	83.7	81.6	79.6	77.5	75.4	73.1	70.6	67.7	60.1	49.8	37.1	32.5	
6"	LS 14A-18	5.5	7.5	119	116	113	110	107	105	101	97.9	93.9	83.4	69.1	51.6	45.2	
	LS 14A-25	7.5	10	164	160	156	152	148	144	140	135	129	115	94.7	70.4	61.5	

SUBMERSIBLE PUMP
LS 14A

According to: ISO 9906 ANNEX A 50Hz 2870 min^{-1}

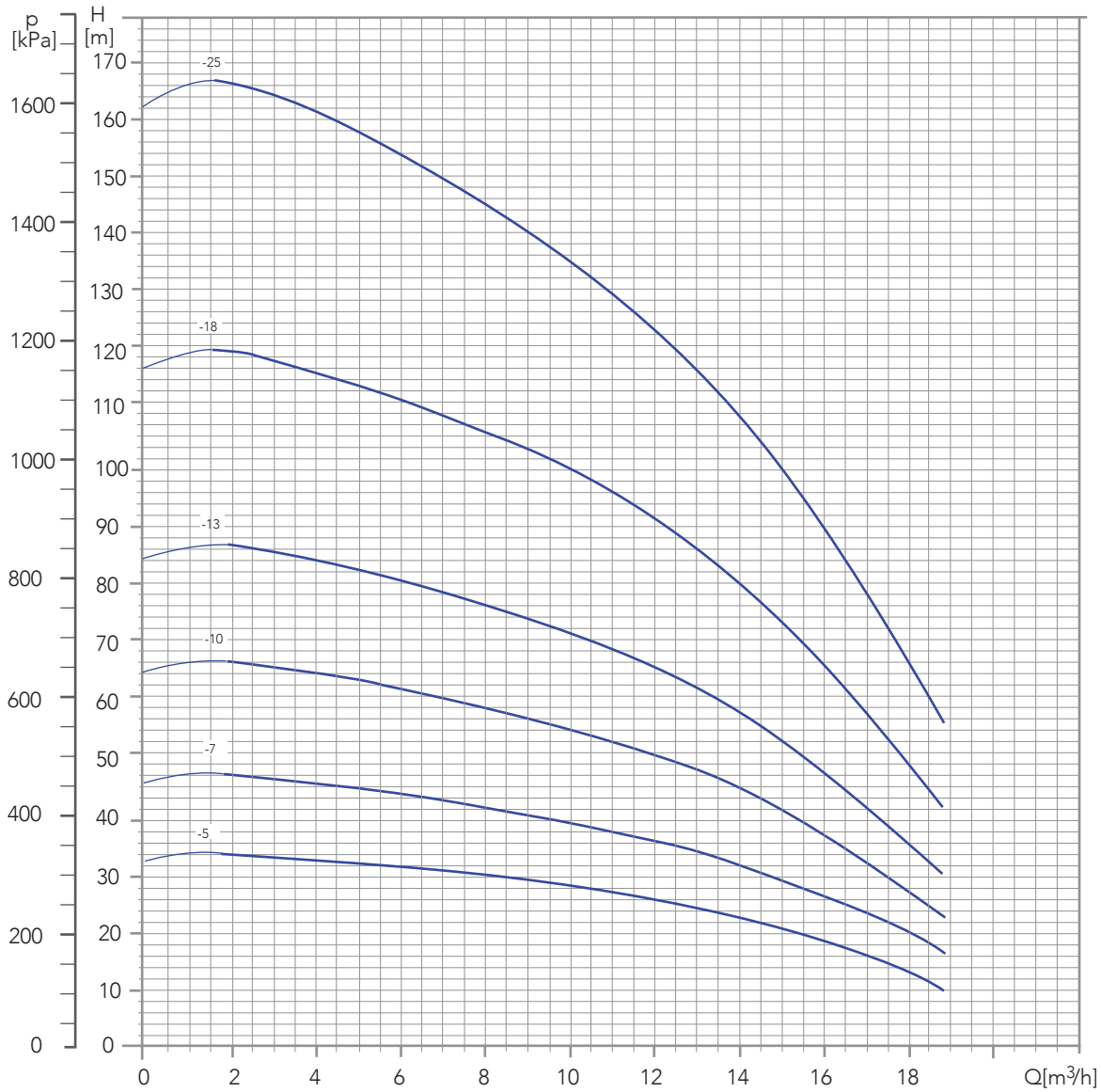

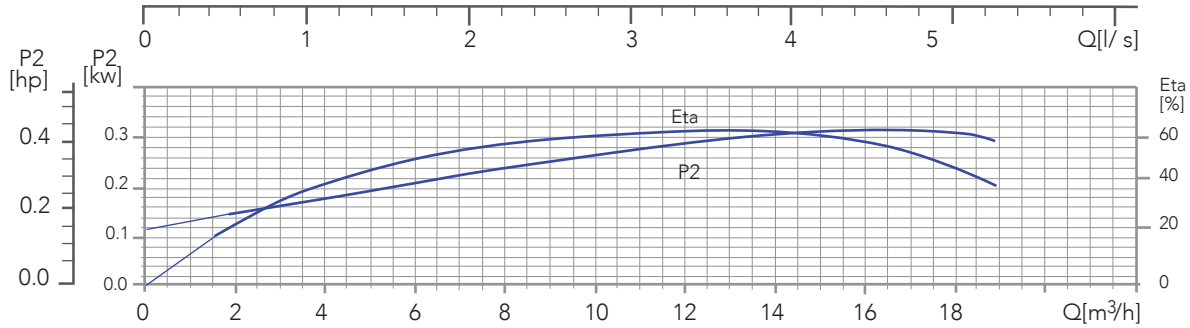

LS 17

Component name

1	Valve casing
2	Valve cup
3	Valve seat
4	Chamber, top
7	Seal ring
8	Bearing
11	Split cone nut
12	Split cone

13	Impeller complete
14	Suction interconnector
15	Strainer
16	Shaft end complete
17	Strap
18	Cable guard
19	Nut

23	Rubber guard
25	Retainer for seal ring
64	Priming screw
72	Wear ring
75	Spacer ring
78	Nameplate
8.a	Washer

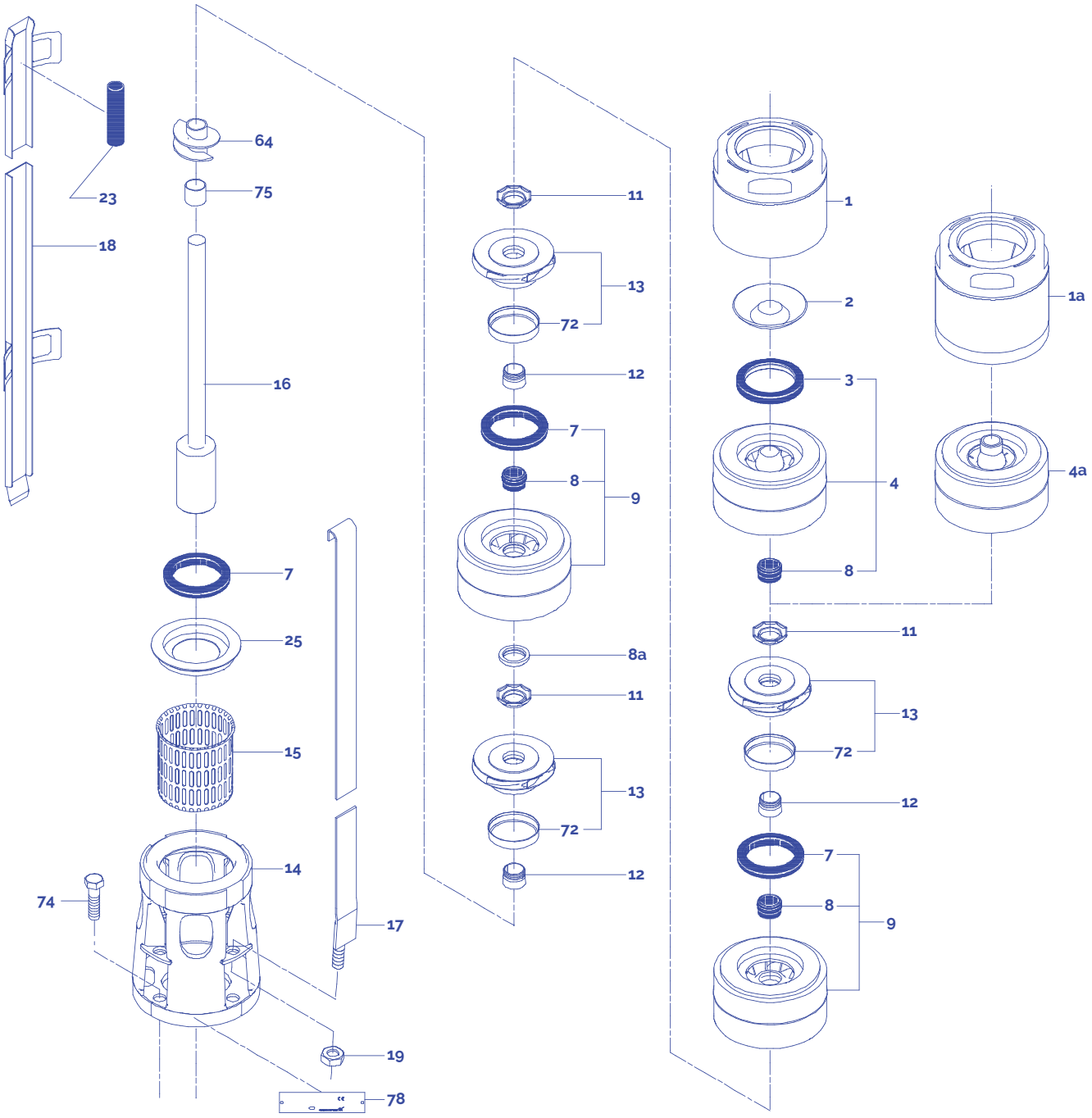
64
75
23
18
16
7
25
15
14
74
17
19
78
11
13
72
12
7
8
9
8a
11
13
72
12
1
2
3
4
8
1a
4a
11
13
72
12
7
8
9

TECHNICAL DATA

SUBMERSIBLE PUMP
LS 17

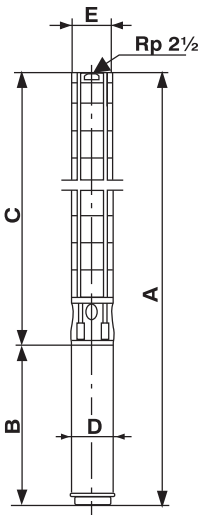

LS 17-43 and LS 17-60 are mounted in sleeve for R 3 connection.

Dimensions & Weights															
Pump Type	Motor		Dimensions [mm]											Net Weight [Kg]	
	Type	Power [kW]	C	B		A		Weight [Kg]			D	E*	E**		
								Pump	Motor						
				1x230V	3x230V 3x400V	1x230V	3x230V 3x400V		1x230V	3x230V 3x400V				1x230V	3x230V 3x400V
LS 17 - 1	SRM 4S	0.55	314	405	370	719	684	5	13	11	95	131		18	16
LS 17 - 2	SRM 4S	1.1	374	505	455	879	829	6	18	15	95	131		24	21
LS 17 - 3	SRM 4S	2.2	435	645	545	1080	980	7	24	20	95	131		31	27
LS 17 - 4	SRM 4S	2.2	495	645	545	1140	1040	8	24	20	95	131		32	28
LS 17 - 5	SRM 4S	3	556		645		1201	9		24	95	131			33
LS 17 - 6	SRM 4S	4	616		715		1331	10		27	95	131			37
LS 17 - 7	SRM 4S	4	677		715		1392	12		27	95	131			39
LS 17 - 8	SRM 4S	5.5	737		795		1532	13		31	95	131			44
LS 17 - 9	SRM 4S	5.5	798		795		1593	14		31	95	131			45
LS 17 - 10	SRM 4S	5.5	858		795		1653	15		31	95	131			46
LS 17 - 11	SRM 6T	7.5	935		827		1762	18		61	138	142	142		79
LS 17 - 12	SRM 6T	7.5	995		827		1822	19		61	138	142	142		80
LS 17 - 13	SRM 6T	7.5	1056		827		1883	20		61	138	142	142		81
LS 17 - 14	SRM 6T	9.2	1116		875		1991	21		66	138	142	142		87
LS 17 - 15	SRM 6T	9.2	1177		875		2052	23		66	138	142	142		89
LS 17 - 16	SRM 6T	9.2	1237		875		2112	24		66	138	142	142		90
LS 17 - 17	SRM 6T	9.2	1298		875		2173	25		66	138	142	142		91
LS 17 - 18	SRM 6T	11	1358		940		2298	26		72	138	142	142		98
LS 17 - 19	SRM 6T	11	1419		940		2359	27		72	138	142	142		99
LS 17 - 20	SRM 6T	11	1479		940		2419	29		72	138	142	142		101
LS 17 - 21	SRM 6T	13	1540		977		2517	30		77	138	142	142		107
LS 17 - 22	SRM 6T	13	1600		977		2557	31		77	138	142	142		108
LS 17 - 23	SRM 6T	13	1661		977		2638	32		77	138	142	142		109
LS 17 - 24	SRM 6T	13	1721		977		2698	33		77	138	142	142		110
LS 17 - 25	SRM 6T	15	1782		1029		2811	35		82	138	142	142		117
LS 17 - 26	SRM 6T	15	1842		1029		2871	36		82	138	142	142		118
LS 17 - 27	SRM 6T	15	1903		1029		2932	37		82	138	142	142		119
LS 17 - 28	SRM 6T	18.5	1963		1090		3053	38		90	138	142	142		128
LS 17 - 29	SRM 6T	18.5	2024		1090		3114	39		90	138	142	142		129
LS 17 - 30	SRM 6T	18.5	2084		1090		3174	41		90	138	142	142		131
LS 17 - 31	SRM 6T	18.5	2145		1090		3235	42		90	138	142	142		132
LS 17 - 32	SRM 6T	18.5	2205		1090		3295	43		90	138	142	142		133
LS 17 - 33	SRM 6T	18.5	2266		1090		3356	44		90	138	142	142		134
LS 17 - 34	SRM 6T	22	2326		1132		3458	45		100	138	142	142		145
LS 17 - 35	SRM 6T	22	2387		1132		3519	47		100	138	142	142		147
LS 17 - 36	SRM 6T	22	2447		1132		3579	48		100	138	142	142		148
LS 17 - 37	SRM 6T	22	2508		1132		3640	49		100	138	142	142		149
LS 17 - 38	SRM 6T	22	2568		1132		3700	50		100	138	142	142		150
LS 17 - 39	SRM 6T	22	2629		1132		3761	51		100	138	142	142		151
LS 17 - 40	SRM 6T	22	2689		1132		3821	53		100	138	142	142		153
LS 17 - 43	SRM 6T	26	3118		1182		4300	94		115	138	142	142		209
LS 17 - 45	SRM 6T	26	3239		1182		4421	98		115	138	142	142		213
LS 17 - 48	SRM 6T	26	3420		1182		4602	103		115	138	142	142		218
LS 17 - 51	Franklin 6"	30	3602		1045		4647	108		73	136	175	181		181
LS 17 - 53	Franklin 6"	30	3723		1045		4768	111		73	136	175	181		184
LS 17 - 55	Franklin 6"	37	3844		1415		5259	114		115	136	175	181		229
LS 17 - 58	Franklin 6"	37	4025		1415		5440	119		115	136	175	181		234
LS 17 - 60	Franklin 6"	37	4166		1415		5561	123		115	136	175	181		238

E* = Maximum diameter of pump with one motor cable.
E** = Maximum diameter of pump with two motor cables.

SUBMERSIBLE PUMP
LS 17

Motor	Pump Type	Flow Q									
		m3/h		0	6	9	12	15	17	21	22
		l/sec		0	1.7	2.5	3.3	4.2	4.7	5.8	6.1
		l/min		0	100	150	200	250	283.3	350	367
		Power		Head H [Meter]							
		[kW]	[HP]								
4″	LS 17 - 1	0.55	0.75	11.8	11.2	10.4	9.28	8.03	7.1	4.71	4.49
	LS 17 - 2	1.1	1.5	23	22.3	21.1	19.3	17.1	15.3	10.8	10.4
	LS 17 - 3	2.2	3	34.5	33.7	32.2	29.8	26.6	24	17.5	16.9
	LS 17 - 4	2.2	3	45.4	44.4	42.5	39.4	35.2	31.7	23	22.4
	LS 17 - 5	3	4	56.7	55.7	53.5	49.7	44.5	40.2	29.4	28.4
	LS 17 - 6	4	5.5	68.2	67	64.5	60.1	53.9	48.9	35.9	34.8
	LS 17 - 7	4	5.5	79	77.7	74.8	69.7	62.4	56.5	41.4	40.1
	LS 17 - 8	5.5	7.5	90.8	89.4	86.2	80.5	72.4	65.7	48.5	47
	LS 17 - 9	5.5	7.5	102	100	96.5	90.1	81	73.4	54.1	52.4
	LS 17 - 10	5.5	7.5	112	111	107	99.6	89.4	80.9	59.4	58.3
6″	LS 17 - 11	7.5	10	125	123	119	111	99.9	90.7	67.2	65.1
	LS 17 - 12	7.5	10	135	134	129	121	108	98.4	72.7	70.5
	LS 17 - 13	7.5	10	146	144	139	130	117	106	78.2	75.7
	LS 17 - 14	9.2	12.5	158	156	151	141	127	115	85.6	82.9
	LS 17 - 15	9.2	12.5	169	167	161	151	136	123	91.1	88.2
	LS 17 - 16	9.2	12.5	180	177	171	160	144	131	96.5	93.4
	LS 17 - 17	9.2	12.5	191	188	182	170	152	138	102	99.8
	LS 17 - 18	11	15	203	200	193	181	163	148	110	106
	LS 17 - 19	11	15	214	211	204	190	171	155	115	111
	LS 17 - 20	11	15	224	221	214	200	180	163	120	118
	LS 17 - 21	13	17.5	237	234	226	211	190	173	128	124
	LS 17 - 22	13	17.5	247	244	236	221	199	180	134	129
	LS 17 - 23	13	17.5	258	255	246	230	207	188	139	135
	LS 17 - 24	13	17.5	269	265	256	240	216	195	145	142
	LS 17 - 25	15	20	281	278	268	251	226	205	152	148
	LS 17 - 26	15	20	292	288	279	261	235	213	158	153
	LS 17 - 27	15	20	303	299	289	270	243	221	163	160
	LS 17 - 28	18.5	25	316	312	302	283	255	232	173	199
	LS 17 - 29	18.5	25	327	323	312	293	264	240	178	203
	LS 17 - 30	18.5	25	338	334	323	302	272	247	184	206
	LS 17 - 31	18.5	25	348	344	333	312	281	255	189	209
	LS 17 - 32	18.5	25	359	355	343	321	289	262	194	213
	LS 17 - 33	18.5	25	370	365	353	331	298	270	200	216
	LS 17 - 34	22	30	383	379	367	344	310	281	209	221
	LS 17 - 35	22	30	394	389	377	353	318	289	215	224
	LS 17 - 36	22	30	405	400	387	363	327	297	220	227
	LS 17 - 37	22	30	416	411	397	372	335	304	226	230
	LS 17 - 38	22	30	427	421	408	382	344	312	231	232
	LS 17 - 39	22	30	437	432	418	391	352	319	237	235
	LS 17 - 40	22	30	448	443	428	401	361	327	242	238
	LS 17 - 43	26	35	483	478	462	433	390	354	263	256
	LS 17 - 45	26	35	505	499	483	452	407	370	274	265
	LS 17 - 48	26	35	537	531	513	480	432	392	290	285
	LS 17 - 51	30	40	573	566	548	513	462	420	311	302
	LS 17 - 53	30	40	594	587	568	532	479	435	322	315
	LS 17 - 55	37	50	620	613	594	557	503	457	341	328
	LS 17 - 58	37	50	653	646	625	586	529	480	358	344
	LS 17 - 60	37	50	675	667	646	605	546	496	369	358

PERFORMANCE CURVES

SUBMERSIBLE PUMP
LS 17

According to: ISO 9906 ANNEX A 50Hz 2870 min^{-1}

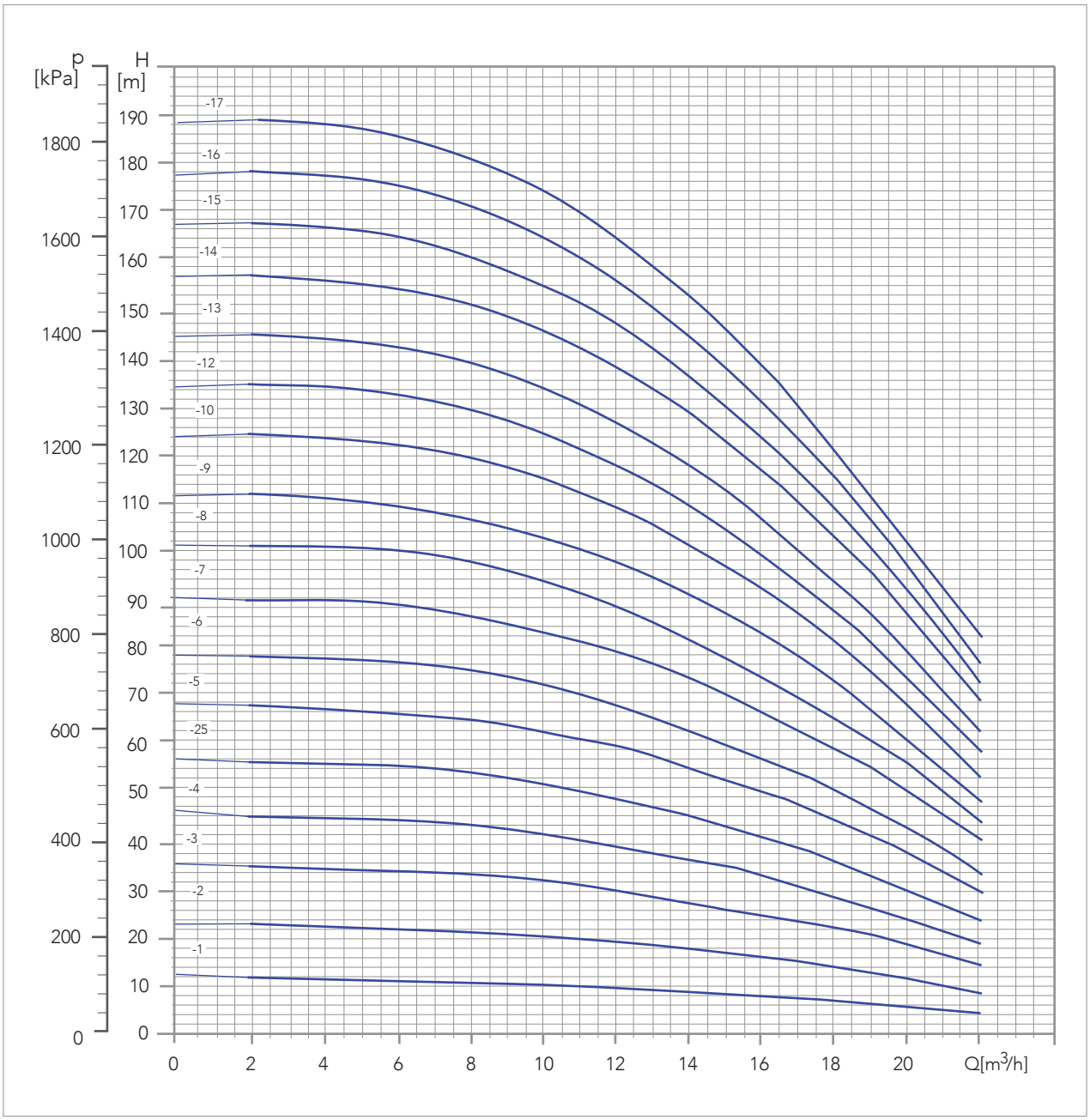

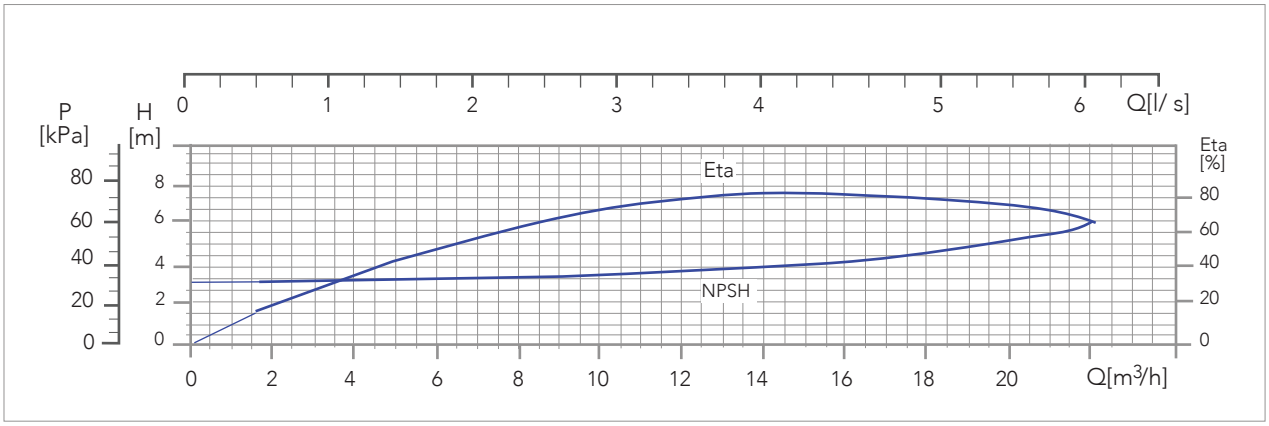

SUBMERSIBLE PUMP
LS 17

According to: ISO 9906 ANNEX A 50Hz 2870 min^{-1}

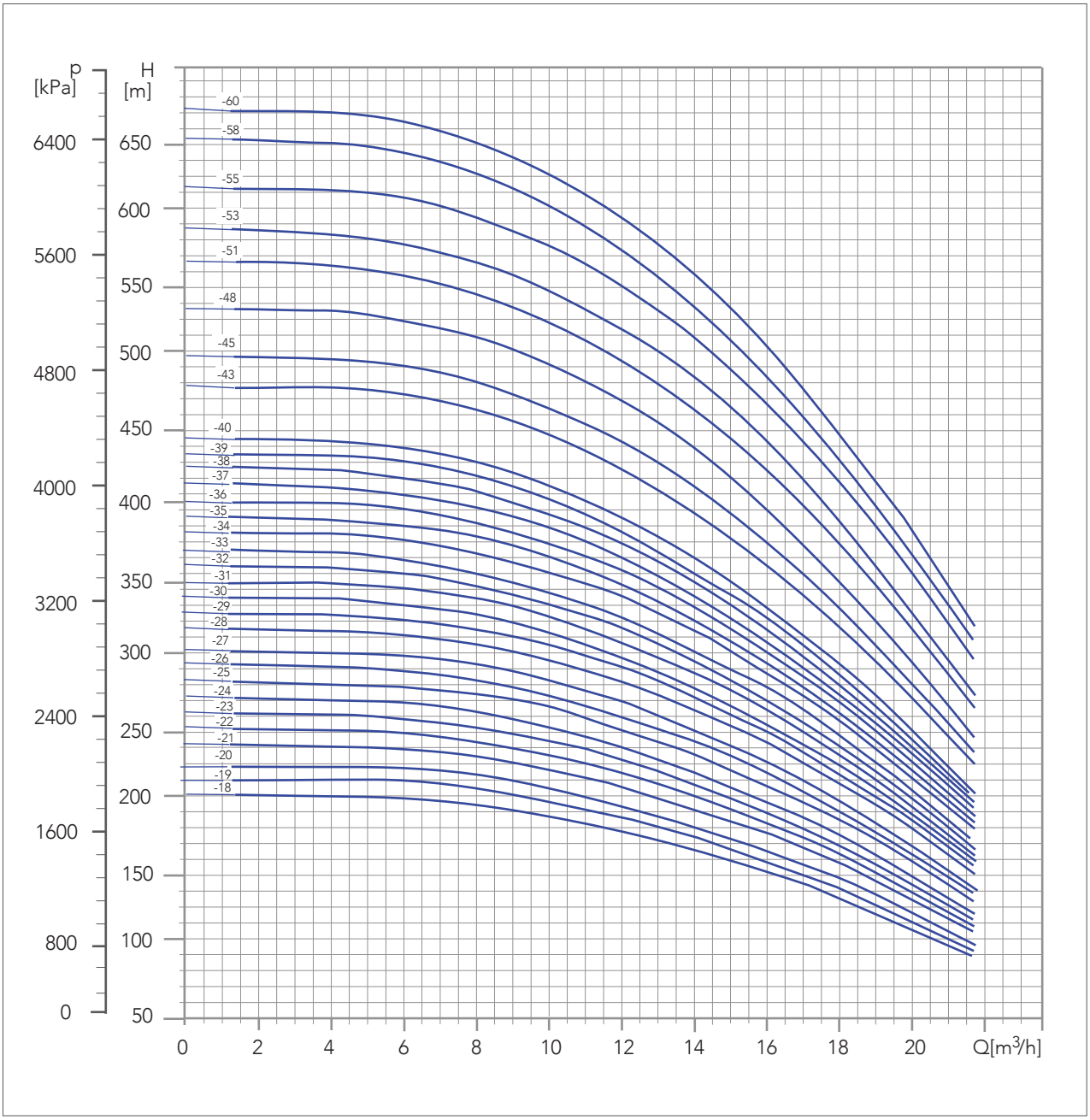

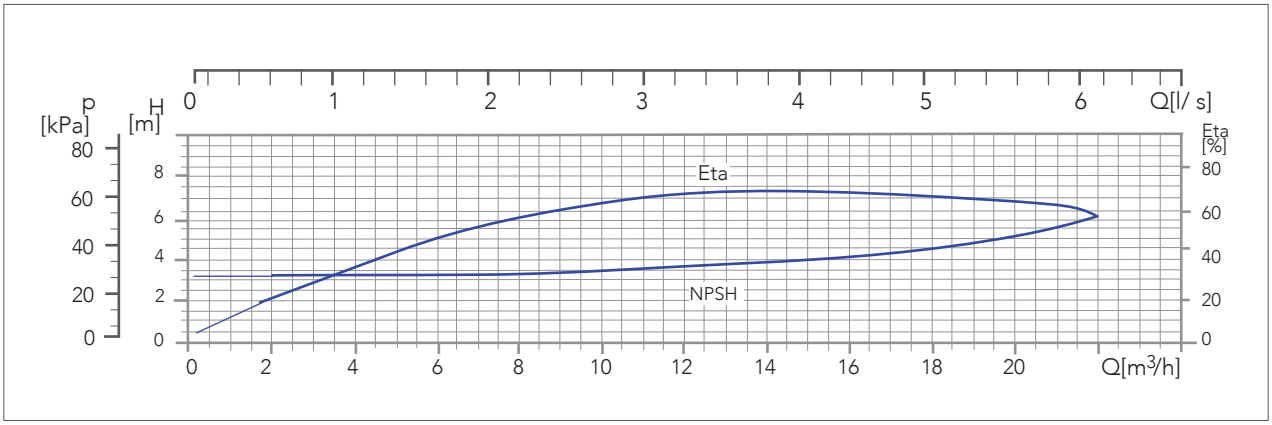

LS 30

Component name

1	Valve casing
2	Valve cup
3	Valve seat
4	Chamber
6	Bearing, top
7	Seal ring
8	Bearing
11	Split cone nut

12	Split cone
13	Impeller complete
14	Suction interconnector
15	Strainer
16	Shaft end complete
17	Strap
18	Cable guard
19	Nut

23	Rubber guard
25	Retainer for seal ring
26	Retainer for strainer
72	Wear ring
78	Nameplate
6.b	Bearing
8.a	Washer
8.b	Stop ring

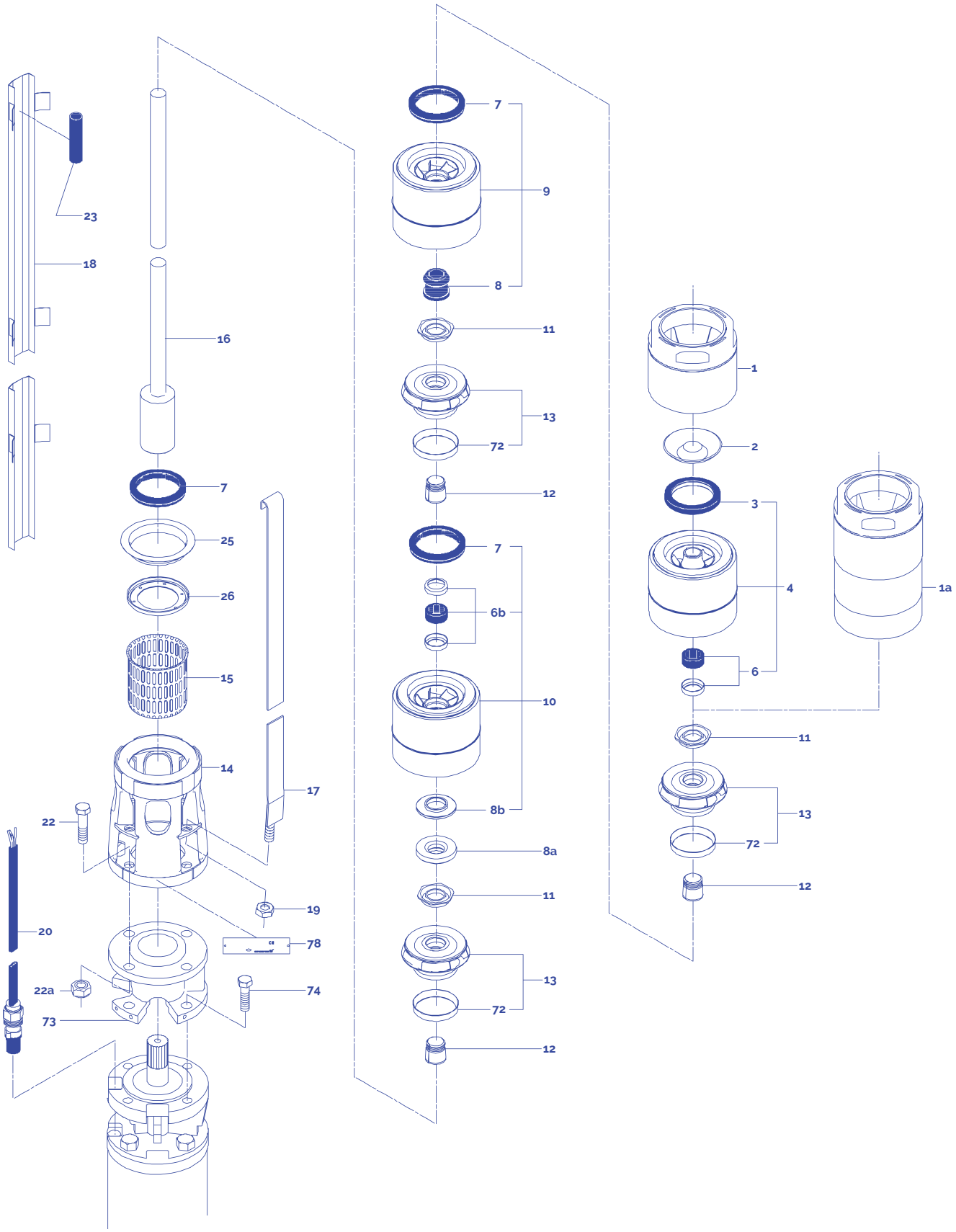
23
18
16
7
25
26
15
14
17
22
20
22a
73
19
78
74
7
9
8
11
13
72
12
7
6b
10
8b
8a
11
13
72
12
1
2
3
4
6
11
13
72
12
1a

TECHNICAL DATA

SUBMERSIBLE PUMP
LS 30

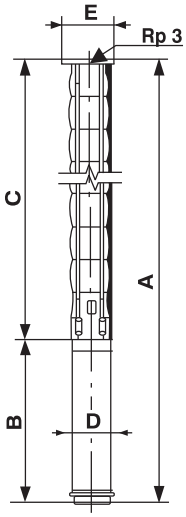

LS 30-39 and LS 30-54 are mounted in sleeve for R 3 connection.

Dimensions & Weights															
Pump Type	Motor		Dimensions [mm]											Net Weight [Kg]	
	Type	Power [kW]	C	B		A		Weight [Kg]			D	E*	E**		
									Motor						
				1x230V	3x230V 3x400V	1x230V	3x230V 3x400V	Pump	1x230V	3x230V 3x400V				1x230V	3x230V 3x400V
LS 30 - 1	SRM 4S	1.1	349	505	455	854	804	5	18	**15**	95	131		23	20
LS 30 - 2	SRM 4S	2.2	445	645	545	1090	990	7	24	**20**	95	131		31	31
LS 30 - 3	SRM 4S	3	541		645		1186	8		**24**	95	131			32
LS 30 - 4	SRM 4S	4	637		715		1352	10		**27**	95	131			37
LS 30 - 5	SRM 4S	5.5	733		795		1528	12		**31**	95	131			43
LS 30 - 6	SRM 4S	5.5	829		795		1624	13		**31**	138	142	142		44
LS 30 - 7	SRM 6T	7.5	941		827		1768	16		**61**	138	142	142		77
LS 30 - 8	SRM 6T	7.5	1037		827		1864	18		**61**	138	142	142		79
LS 30 - 9	SRM 6T	9.2	1133		875		2008	20		**66**	138	142	142		86
LS 30 - 10	SRM 6T	9.2	1229		875		2104	21		**66**	138	142	142		87
LS 30 - 11	SRM 6T	9.2	1325		875		2200	23		**66**	138	142	142		89
LS 30 - 12	SRM 6T	11	1421		940		2361	25		**72**	138	142	142		97
LS 30 - 13	SRM 6T	11	1517		940		2457	26		**72**	138	142	142		98
LS 30 - 14	SRM 6T	13	1613		977		2590	28		**77**	138	142	142		105
LS 30 - 15	SRM 6T	13	1709		977		2686	30		**77**	138	142	142		107
LS 30 - 16	SRM 6T	15	1805		1029		2834	31		**82**	138	142	142		113
LS 30 - 17	SRM 6T	15	1901		1029		2930	33		**82**	138	142	142		115
LS 30 - 18	SRM 6T	18.5	1997		1090		3087	35		**90**	138	142	142		125
LS 30 - 19	SRM 6T	18.5	2093		1090		3183	36		**90**	138	142	142		126
LS 30 - 20	SRM 6T	18.5	2189		1090		3279	38		**90**	138	142	142		128
LS 30 - 21	SRM 6T	18.5	2285		1090		3375	40		**90**	138	142	142		130
LS 30 - 22	SRM 6T	22	2281		1132		3513	41		**100**	138	142	142		141
LS 30 - 23	SRM 6T	22	2477		1132		3609	43		**100**	138	142	142		143
LS 30 - 24	SRM 6T	22	2573		1132		3705	45		**100**	138	142	142		145
LS 30 - 25	SRM 6T	22	2669		1132		3801	46		**100**	138	142	142		146
LS 30 - 26	SRM 6T	22	2765		1132		3897	48		**100**	138	142	142		148
LS 30 - 27	SRM 6T	26	2861		1182		4043	50		**115**	138	142	142		165
LS 30 - 28	SRM 6T	26	2957		1182		4139	51		**115**	138	142	142		166
LS 30 - 29	SRM 6T	26	3053		1182		4235	53		**115**	138	142	142		168
LS 30 - 30	SRM 6T	26	3149		1182		4331	55		**115**	138	142	142		170
LS 30 - 31	SRM 6T	26	3245		1182		4427	56		**115**	138	142	142		171
LS 30 - 32	Franklin 6"	30	3341		1045		4386	58		**73**	136	152	156		131
LS 30 - 33	Franklin 6"	30	3437		1045		4482	60		**73**	136	152	156		133
LS 30 - 34	Franklin 6"	30	3533		1045		4578	61		**73**	136	152	156		134
LS 30 - 35	Franklin 6"	30	3629		1045		4674	63		**73**	136	152	156		136
LS 30 - 39	Franklin 6"	37	4260		1415		5675	128		**115**	136	152	156		243
LS 30 - 43	Franklin 6"	37	4644		1415		6059	139		**115**	136	152	156		254
LS 30 - 46	Franklin 8"	45	4881		1062		5943	148		**143**	192	192	192		291
LS 30 - 49	Franklin 8"	45	5169		1062		6231	157		**143**	192	192	192		300
LS 30 - 52	Franklin 8"	55	5457		1062		6519	166		**175**	192	192	192		341
LS 30 - 54	Franklin 8"	55	5649		1062		6711	172		**175**	192	192	192		347

E* = Maximum diameter of pump with one motor cable.
E** = Maximum diameter of pump with two motor cables.

SUBMERSIBLE PUMP
LS 30

Motor	Pump Type	Flow Q									
		m³/h		0	6	10	14	18	22	26	30
		l/sec		0	1.7	2.8	3.9	5	6.1	7.2	8.3
		l/min		0	100	167	233	300	367	433	500
		Power		Head H [Meter]							
		[kW]	[HP]								
4″	LS 30 - 1	1.1	15	11.9	11.1	10.1	9.16	8.13	6.84	4.99	4.08
	LS 30 - 2	2.2	3	23.4	22.1	20.6	18.9	17.2	14.8	11.4	9.68
	LS 30 - 3	3	4	34.8	33.1	30.9	28.6	26.1	22.6	17.6	15.1
	LS 30 - 4	4	5.5	46.3	44.1	41.3	38.3	35.1	30.5	23.9	20.6
	LS 30 - 5	5.5	7.5	57.9	55.4	51.9	48.3	44.3	38.8	30.5	26.5
	LS 30 - 6	7.5	10	69.1	66	61.8	57.5	52.8	46	36.1	31.3
6″	LS 30 - 7	7.5	10	80.9	77.5	72.7	67.8	62.3	54.6	43.1	37.6
	LS 30 - 8	7.5	10	92	88	82.6	77	70.7	61.9	48.7	42.4
	LS 30 - 9	9.2	12.5	104	99.4	93.3	87.1	80.2	70.3	55.6	48.5
	LS 30 - 10	9.2	12.5	115	110	103	96.3	88.5	77.5	61.1	53.3
	LS 30 - 11	9.2	12.5	126	120	113	105	96.8	84.7	66.8	58.1
	LS 30 - 12	11	15	138	132	124	116	106	93.2	73.6	64.2
	LS 30 - 13	11	15	149	142	134	125	115	100	79.2	68.9
	LS 30 - 14	13	17.5	161	154	145	135	124	109	86.2	75.3
	LS 30 - 15	13	17.5	172	165	154	144	133	116	91.7	80
	LS 30 - 16	15	20	184	176	165	155	142	125	98.9	86.4
	LS 30 - 17	15	20	195	187	175	164	151	132	104	91.1
	LS 30 - 18	18.5	25	207	199	187	175	161	142	113	98.5
	LS 30 - 19	18.5	25	218	209	197	184	170	149	118	103
	LS 30 - 20	18.5	25	229	220	207	193	178	156	124	108
	LS 30 - 21	18.5	25	241	230	217	202	186	163	129	113
	LS 30 - 22	22	30	253	243	228	214	197	173	137	120
	LS 30 - 23	22	30	264	253	238	223	205	180	143	125
	LS 30 - 24	22	30	275	264	248	232	214	188	149	130
	LS 30 - 25	22	30	286	274	258	241	222	195	154	135
	LS 30 - 26	22	30	297	285	268	250	230	202	160	139
	LS 30 - 27	26	35	310	298	280	262	241	212	168	147
	LS 30 - 28	26	35	321	308	290	271	250	219	174	152
	LS 30 - 29	26	35	332	319	299	280	258	226	179	157
	LS 30 - 30	26	35	343	329	309	289	266	234	185	161
	LS 30 - 31	26	35	354	339	319	298	275	241	191	166
	LS 30 - 32	30	40	367	352	331	310	286	251	199	174
	LS 30 - 33	30	40	378	363	341	319	294	258	205	179
	LS 30 - 34	30	40	389	373	351	328	302	265	210	184
	LS 30 - 35	30	40	400	384	361	337	311	272	216	188
	LS 30 - 39	37	50	447	430	404	378	349	306	243	213
	LS 30 - 43	37	50	492	471	443	414	382	335	265	232
8″	LS 30 - 46	45	60	528	507	477	447	412	363	288	253
	LS 30 - 49	45	60	562	539	507	474	437	384	305	267
	LS 30 - 52	55	75	559	575	542	507	469	413	329	288
	LS 30 - 54	55	75	621	597	561	526	485	427	340	298

SUBMERSIBLE PUMP
LS 30

According to: ISO 9906 ANNEX A 50Hz 2870 min^{-1}

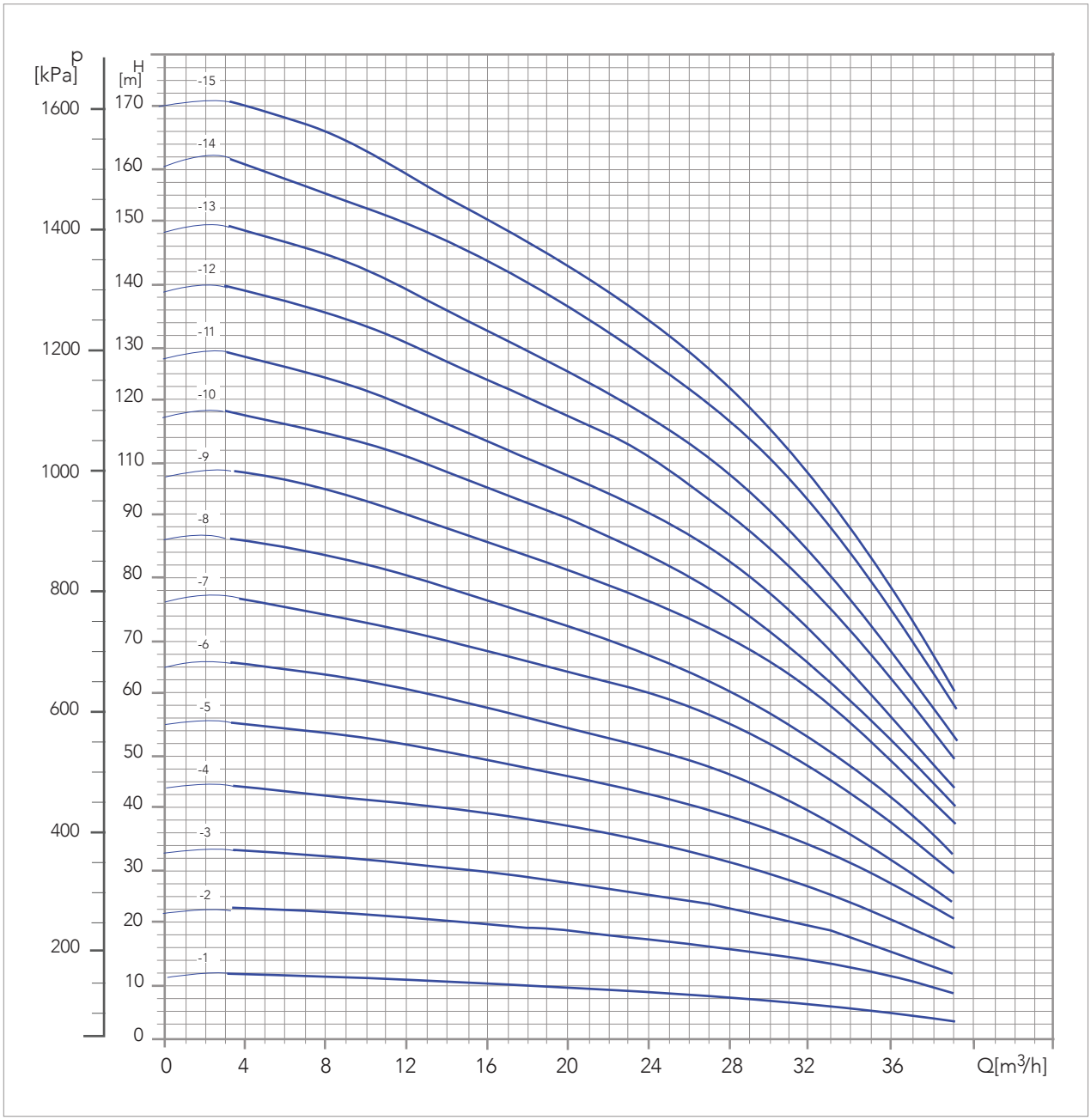

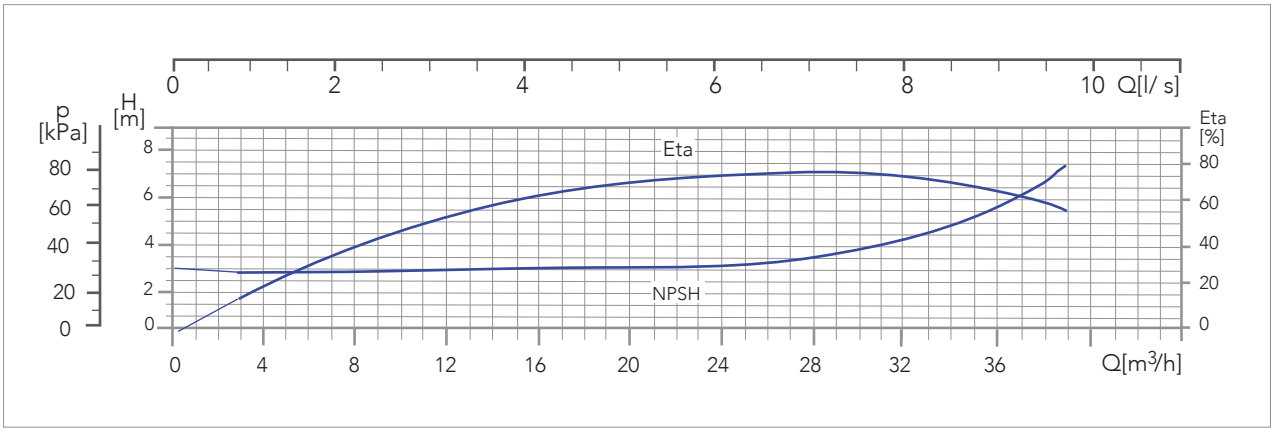

SUBMERSIBLE PUMP
LS 30

According to: ISO 9906 ANNEX A 50Hz 2870 min^{-1}

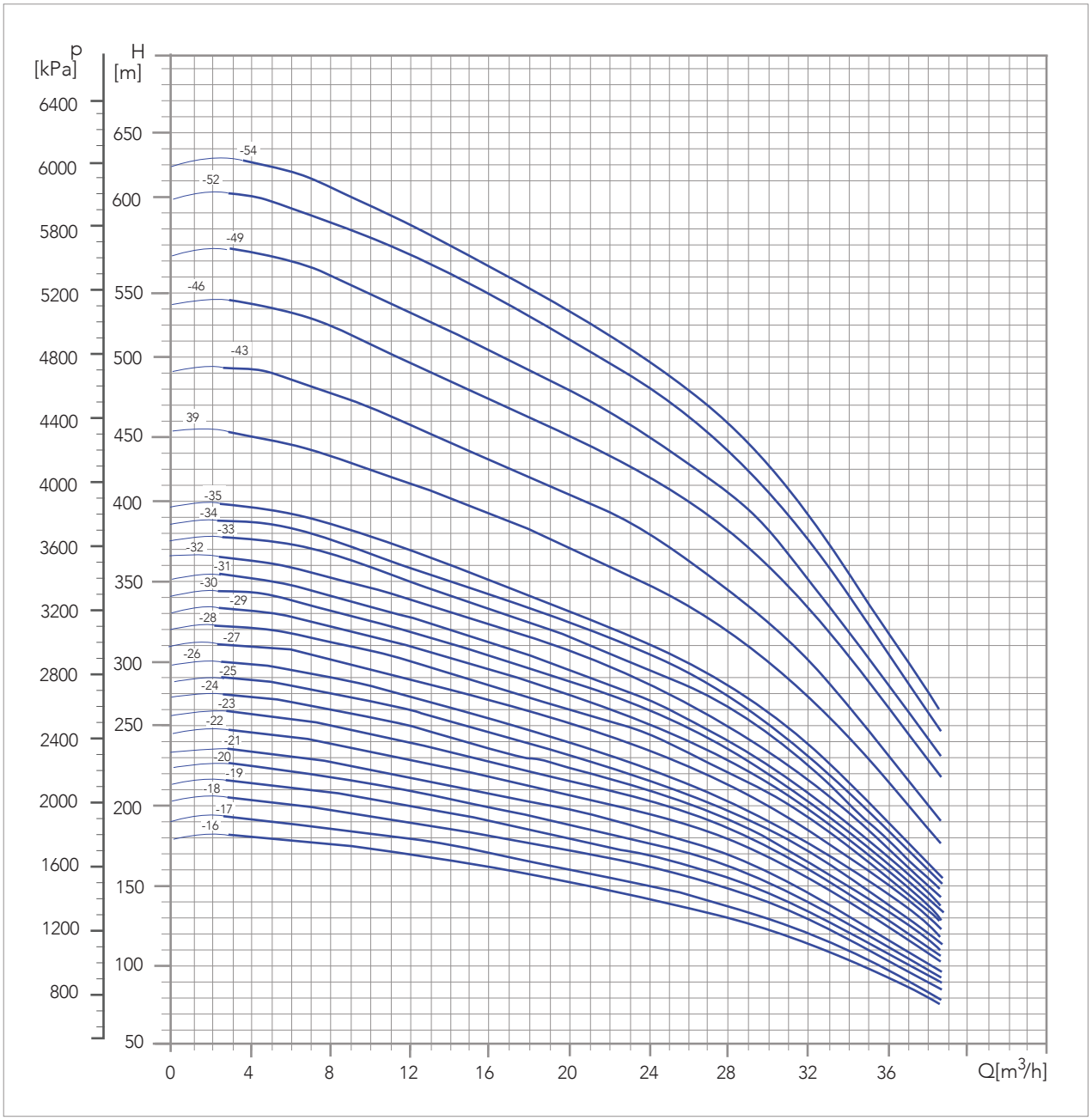

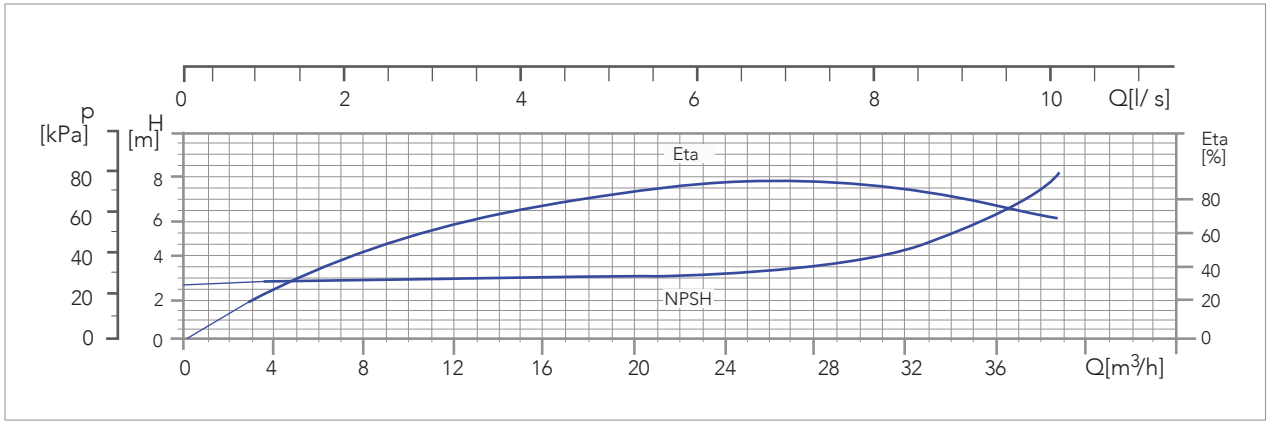

LS 46

Component name

1	Valve casing
2	Valve cup
3	Valve seat
4	Chamber, bottom
7	Seal ring
8	Bearing
12	Split cone
13	Impeller complete

14	Suction interconnector
15	Strainer
16	Shaft end complete
17	Strap
18	Cable guard
19	Nut
23	Rubber guard

68	Seal ring
72	Wear ring
78	Nameplate
11.c	Nut
6.b	Bearing
8.a	Washer
8.b	Stop ring

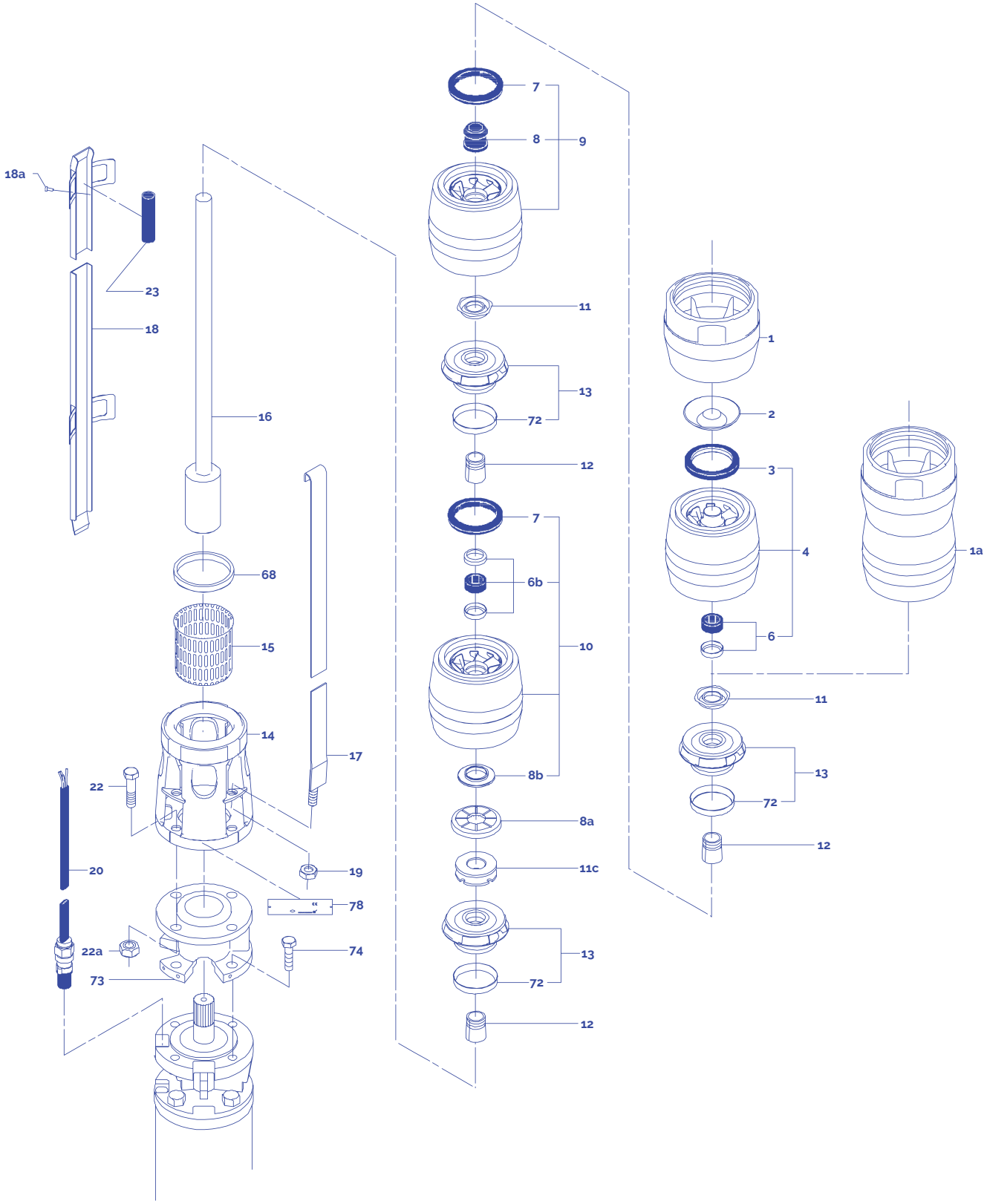
18a
23
18
16
68
15
14
17
22
20
19
78
22a
74
73
7
8
9
11
13
72
12
7
6b
10
8b
8a
11c
13
72
12
1
2
3
4
6
11
13
72
12
1a

SUBMERSIBLE PUMP
LS 46

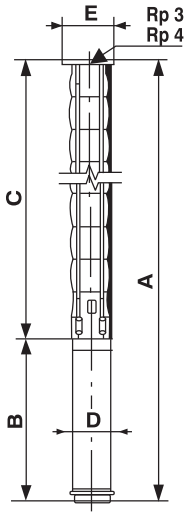

LS 46A-26 and LS-46A-37 are mounted in sleeve for R 4 connection.

Dimensions & Weights															
Pump Type	Motor		Dimensions [mm]										Weight [Kg]		Net Weight [Kg]
	Type	Power [kW]	Rp 3 Connection				Rp 4 Connection				B	D	Pump	Motor	
			A	C	E*	E**	A	C	E*	E**					
LS 46 - 1	SRM 4S	2.2	909	364	141		915	370	145		545	95	6	20	26
LS 46 - 2	SRM 4S	3	1122	477	141		1128	483	145		645	95	8	24	32
LS 46 - 3	SRM 4S	5.5	1385	590	141		1391	596	145		795	95	11	31	42
LS 46 - 4	SRM 6T	7.5	1546	719	145	150	1552	725	147	152	827	138	15	61	76
LS 46 - 5	SRM 6T	7.5	1659	832	145	150	1665	838	147	152	827	138	17	61	78
LS 46 - 6	SRM 6T	9.2	1820	945	145	150	1826	951	147	152	875	138	20	66	86
LS 46 - 7	SRM 6T	11	1998	1058	145	150	2004	1064	147	152	940	138	22	72	94
LS 46 - 8	SRM 6T	13	2148	1171	145	150	2154	1177	147	152	977	138	25	77	102
LS 46 - 9	SRM 6T	15	2313	1284	145	150	2319	1290	147	152	1029	138	27	82	109
LS 46 - 10	SRM 6T	15	2426	1397	145	150	2432	1403	147	152	1029	138	30	82	112
LS 46 - 11	SRM 6T	18.5	2600	1510	145	150	2606	1516	147	152	1090	138	32	90	122
LS 46 - 12	SRM 6T	18.5	2713	1623	145	150	2719	1629	147	152	1090	138	35	90	125
LS 46 - 13	SRM 6T	22	2868	1736	145	150	2874	1742	147	152	1132	138	37	100	137
LS 46 - 14	SRM 6T	22	2981	1849	145	150	2987	1855	147	152	1132	138	40	100	140
LS 46 - 15	SRM 6T	22	3094	1962	145	150	3100	1968	147	152	1132	138	42	100	142
LS 46 - 16	SRM 6T	26	3257	2075	145	150	3263	2081	147	152	1182	138	45	115	160
LS 46 - 17	SRM 6T	26	3370	2188	145	150	3376	2194	147	152	1182	138	47	115	162
LS 46 - 18	Franklin 6"	30	3346	2301	145	150	3352	2307	147	152	1045	138	50	73	123
LS 46 - 19	Franklin 6"	30	3459	2414	145	150	3456	2420	147	152	1045	136	52	73	125
LS 46 - 20	Franklin 6"	30	3652	2607	145	150	3658	2613	147	152	1045	136	55	73	128
LS 46 - 21	Franklin 6"	37	4135	2720	145	150	4141	2726	147	152	1415	136	57	115	172
LS 46 - 22	Franklin 6"	37	4248	2833	145	150	4254	2839	147	152	1415	136	60	115	175
LS 46 - 23	Franklin 6"	37	4361	2946	145	150	4367	2952	147	152	1415	136	62	115	177
LS 46 - 24	Franklin 6"	37	4474	3059	145	150	4480	3065	147	152	1415	136	65	115	180
LS 46 - 26	Franklin 8"	45					4465	3403	192	192	1062	192	101	143	244
LS 46 - 28	Franklin 8"	45					4691	3629	192	192	1062	192	107	143	250
LS 46 - 30	Franklin 8"	45					4917	3855	192	192	1062	192	113	143	256
LS 46 - 33	Franklin 8"	55					5398	4194	192	192	1204	192	119	175	294
LS 46 - 35	Franklin 8"	55					5624	4420	192	192	1204	192	125	175	300
LS 46 - 37	Franklin 8"	75					6041	4646	192	192	1395	192	131	210	341

E* = Maximum diameter of pump with one motor cable.
E** = Maximum diameter of pump with two motor cables.

SUBMERSIBLE PUMP
LS 46

Motor	Pump Type	Flow Q									
		m^3/h		0	15	25	35	45	55	60	
		l/sec		0	4.20	6.90	9.70	13	15.3	16.7	
		l/min		0	250	417	583	750	916.7	1000	
		Power		Head H [Meter]							
		[kW]	[HP]								
4"	LS 46 - 1	2.2	3	13.8	12.5	11.3	9.83	8.08	5.56	4.61	
	LS 46 - 2	3	4	27.1	25	22.8	20.1	16.9	12.2	10.7	
	LS 46 - 3	5.5	7.5	41	37.9	34.9	31.1	26.3	19.5	17.1	
6"	LS 46 - 4	7.5	10	54.8	50.7	46.7	41.8	35.6	26.7	23.4	
	LS 46 - 5	7.5	10	67.9	62.9	57.9	51.8	44	32.9	29.2	
	LS 46 - 6	9.2	12.5	81.5	75.6	69.7	62.4	53.1	39.9	57.6	
	LS 46 - 7	11	15	95.2	88.4	81.5	73.1	62.3	46.9	41.7	
	LS 46 - 8	13	17.5	109	101	93.4	83.9	71.6	54.1	48.2	
	LS 46 - 9	15	20	123	114	105	94.6	80.9	61.2	54	
	LS 46 - 10	15	20	136	126	116	104	89.2	67.3	60.5	
	LS 46 - 11	18.5	25	150	139	129	116	99.2	75.3	66.7	
	LS 46 - 12	18.5	25	163	152	140	124	108	81.4	72.5	
	LS 46 - 13	22	30	177	165	153	137	117	89.3	79.1	
	LS 46 - 14	22	30	190	177	164	147	126	95.5	85.4	
	LS 46 - 15	22	30	204	189	175	157	134	102	91.6	
	LS 46 - 16	26	35	218	203	187	169	144	110	97.5	
	LS 46 - 17	26	35	231	215	199	179	153	116	104	
	LS 46 - 18	30	40	245	228	211	190	163	124	110	
	LS 46 - 19	30	40	259	240	222	200	171	130	117	
	LS 46 - 20	30	40	272	253	233	210	180	136	124	
	LS 46 - 21	37	50	287	267	247	223	191	146	130	
	LS 46 - 22	37	50	300	279	259	233	200	152	136	
	LS 46 - 23	37	50	313	291	270	243	208	158	142	
	LS 46 - 24	37	50	326	304	281	253	216	164	148	
8"	LS 46 - 26	45	60	355	331	306	276	237	181	161	
	LS 46 - 28	45	60	381	355	328	296	253	193	174	
	LS 46 - 30	45	60	407	379	350	315	270	205	185	
	LS 46 - 33	55	75	450	419	388	349	300	229	205	
	LS 46 - 35	55	75	476	443	410	369	316	241	217	
	LS 46 - 37	75	100	505	470	435	392	337	257	230	

SUBMERSIBLE PUMP
LS 46

According to: ISO 9906 ANNEX A 50Hz 2870 min^{-1}

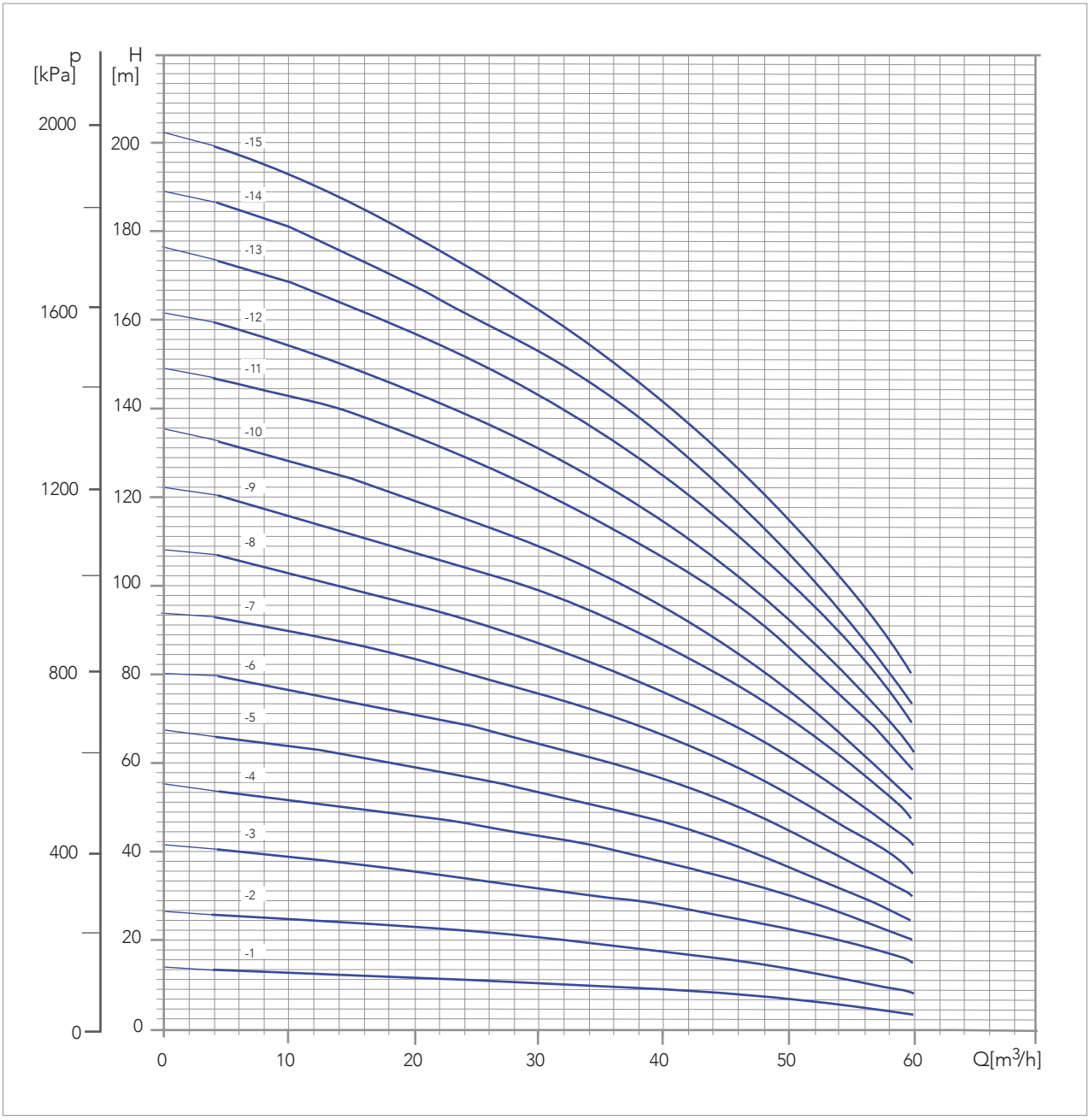

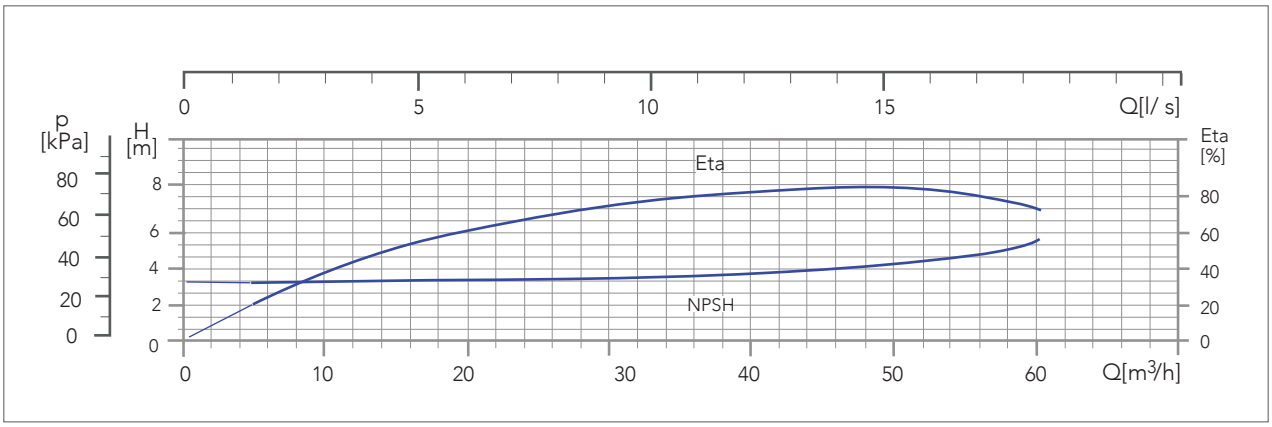

SUBMERSIBLE PUMP
LS 46

According to: ISO 9906 ANNEX A 50Hz 2870 min^{-1}

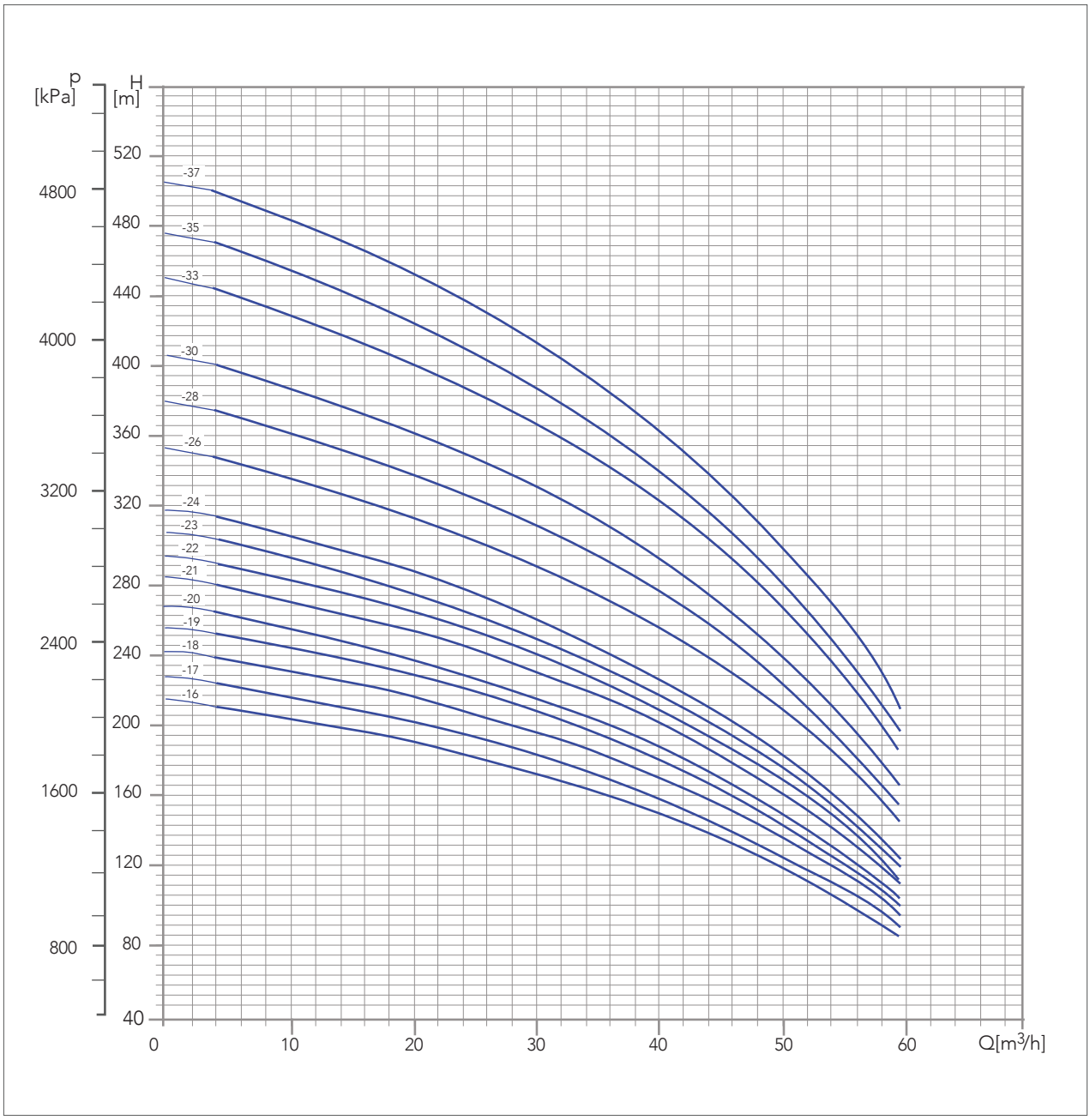

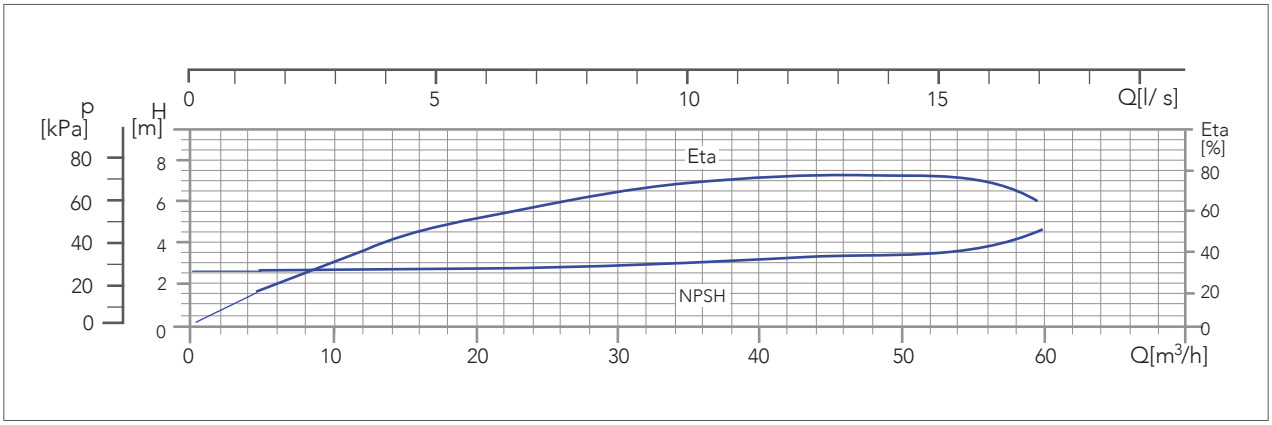

LS 60

Component name

1	Valve casing
2	Valve cup
3	Valve seat
4	Chamber, bottom
7	Seal ring
8	Bearing
12	Split cone
13	Impeller complete

14	Suction interconnector
15	Strainer
16	Shaft end complete
17	Strap
18	Cable guard
19	Nut
23	Rubber guard

68	Seal ring
72	Wear ring
78	Nameplate
11.c	Nut
6.b	Bearing
8.a	Washer
8.b	Stop ring

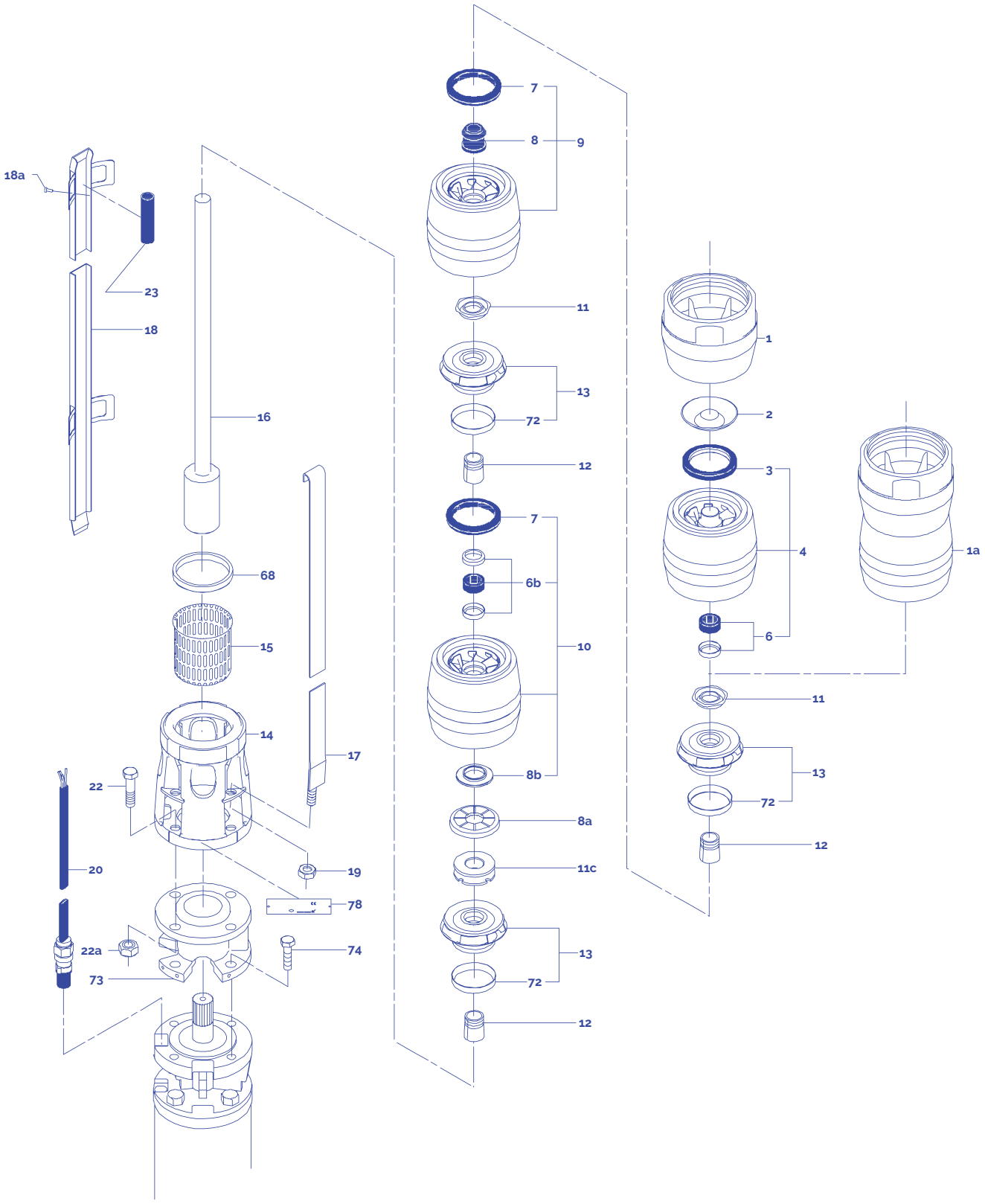
18a
23
18
16
68
15
14
17
22
20
19
78
22a
74
73
7
8
9
11
13
72
12
7
6b
10
8b
8a
11c
13
72
12
1
2
3
4
6
11
13
72
12
1a

TECHNICAL DATA

SUBMERSIBLE PUMP
LS 60

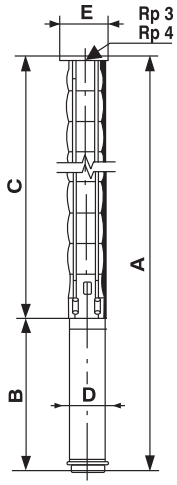

Dimensions & Weights																
Pump Type	Motor		Dimensions [mm]										Weight [Kg]		Net Weight [Kg]
	Type	Power [kW]	Rp 3 Connection				Rp 4 Connection				B	D	Pump	Motor	
			A	C	E*	E**	A	C	E*	E**					
LS 60 - 1	SRM 4S	2.2	909	364	141		915	370	145		545	95	6	20	26
LS 60 - 2	SRM 4S	4	1192	477	141		1198	483	145		715	95	8	27	35
LS 60 - 3	SRM 4S	5.5	1385	590	141		1391	596	145		795	95	11	31	42
LS 60 - 4	SRM 6T	7.5	1546	719	145	150	1552	725	147	152	827	138	15	61	76
LS 60 - 5	SRM 6T	9.2	1707	832	145	150	1713	838	147	152	875	138	17	66	83
LS 60 - 6	SRM 6T	11	1890	950	145	150	1891	951	147	152	940	138	20	72	92
LS 60 - 7	SRM 6T	13	2035	1058	145	150	2041	1064	147	152	977	138	22	77	99
LS 60 - 8	SRM 6T	15	2200	1171	145	150	2206	1177	147	152	1029	138	25	82	107
LS 60 - 9	SRM 6T	18.5	2374	1284	145	150	2380	1290	147	152	1090	138	27	90	117
LS 60 - 10	SRM 6T	18.5	2487	1397	145	150	2493	1403	147	152	1090	138	30	90	120
LS 60 - 11	SRM 6T	22	2642	1510	145	150	2648	1516	147	152	1132	138	32	100	132
LS 60 - 12	SRM 6T	22	2755	1623	145	150	2761	1629	147	152	1132	138	35	100	135
LS 60 - 13	SRM 6T	26	2918	1736	145	150	2924	1742	147	152	1182	138	37	115	152
LS 60 - 14	SRM 6T	26	3031	1849	145	150	3037	1855	147	152	1182	138	43	115	158
LS 60 - 15	SRM 6T	26	3144	1962	145	150	3150	1968	152	152	1182	138	45	115	160
LS 60 - 16	Franklin 6"	30	3120	2075	150	154	3126	2081	152	156	1045	136	47	73	120
LS 60 - 17	Franklin 6"	30	3233	2188	150	154	3239	2194	152	156	1045	136	49	73	122
LS 60 - 18	Franklin 6"	37	3796	2381	150	154	3802	2387	152	156	1415	136	52	115	167
LS 60 - 19	Franklin 6"	37	3909	2494	150	154	3915	2500	152	156	1415	136	55	115	170
LS 60 - 20	Franklin 6"	37	4022	2607	150	154	4028	2613	152	156	1415	136	58	115	173
LS 60 - 21	Franklin 6"	37	4137	2722	150	154	4141	2726	192	156	1415	136	60	115	175
LS 60 - 22	Franklin 8"	45	3846	2784	192	192	3850	2788	192	195	1062	192	63	143	206
LS 60 - 24	Franklin 8"	45					4239	3177	192	195	1062	192	69	143	212
LS 60 - 26	Franklin 8"	55					4607	3403	192	195	1204	192	75	175	250
LS 60 - 28	Franklin 8"	55					4833	3629	192	195	1204	192	81	175	256
LS 60 - 30	Franklin 8"	55					5059	3855	192	195	1204	192	87	175	262

E* = Maximum diameter of pump with one motor cable.
E** = Maximum diameter of pump with two motor cables.

SUBMERSIBLE PUMP
LS 60

Motor	Pump Type	Flow Q									
		m^3/h		0	10	20	30	40	50	60	70
		l/sec		0	1.7	6	8	11	14	17	19
		l/min		0	100	333	500	667	883	1000	1166.7
		Power		Head H [Meter]							
		[kW]	[HP]								
4″	LS 60 - 1	2.2	3	13.3	13.3	12.8	11.1	8.75	7.68	6.42	4.11
	LS 60 - 2	4	5.5	27.9	27.5	26.3	23.5	19.7	17.2	14.5	10.5
	LS 60 - 3	5.5	7.5	42.3	41.6	39.7	35.6	30.4	26.6	22.5	16.7
6″	LS 60 - 4	7.5	10	56.9	55.9	53.4	48	41.4	36.2	30.7	23.1
	LS 60 - 5	9.2	12.5	71.4	70.1	66.8	60.3	52.2	45.6	38.8	29.4
	LS 60 - 6	11	15.5	85.9	84.3	80.4	72.6	63.1	55.1	46.9	35.8
	LS 60 - 7	13	17.5	101	98.6	94	85	74.1	64.7	55	42.2
	LS 60 - 8	15	20	115	113	108	97.4	85	74.3	63.2	48.6
	LS 60 - 9	18.5	25	130	128	122	110	96.6	84.4	71.9	55.6
	LS 60 - 10	18.5	25	144	141	135	122	107	93.2	79.4	61.3
	LS 60 - 11	22	30	159	156	149	135	118	103	88.1	68.3
	LS 60 - 12	22	30	173	170	162	147	128	112	95.5	74
	LS 60 - 13	26	35	189	185	176	160	140	122	104	81.2
	LS 60 - 14	26	35	202	198	189	171	150	131	112	86.8
	LS 60 - 15	26	35	216	212	202	183	160	140	119	92.4
	LS 60 - 16	30	35	232	227	216	196	172	150	128	99.7
	LS 60 - 17	30	35	245	240	229	208	182	159	136	105
	LS 60 - 18	37	40	262	257	245	222	195	171	146	114
	LS 60 - 19	37	40	276	270	257	234	206	180	153	119
	LS 60 - 20	37	40	290	284	270	245	216	188	161	125
	LS 60 - 21	37	40	304	297	283	257	226	197	168	131
8″	LS 60 - 22	45	60	320	314	299	272	239	209	178	139
	LS 60 - 24	45	60	348	341	325	295	260	227	193	151
	LS 60 - 26	55	75	379	372	354	322	284	248	212	166
	LS 60 - 28	55	75	407	399	380	345	304	266	227	177
	LS 60 - 30	55	75	435	426	405	368	325	283	242	189

SUBMERSIBLE PUMP
LS 60

According to: ISO 9906 ANNEX A 50Hz 2870 min^{-1}

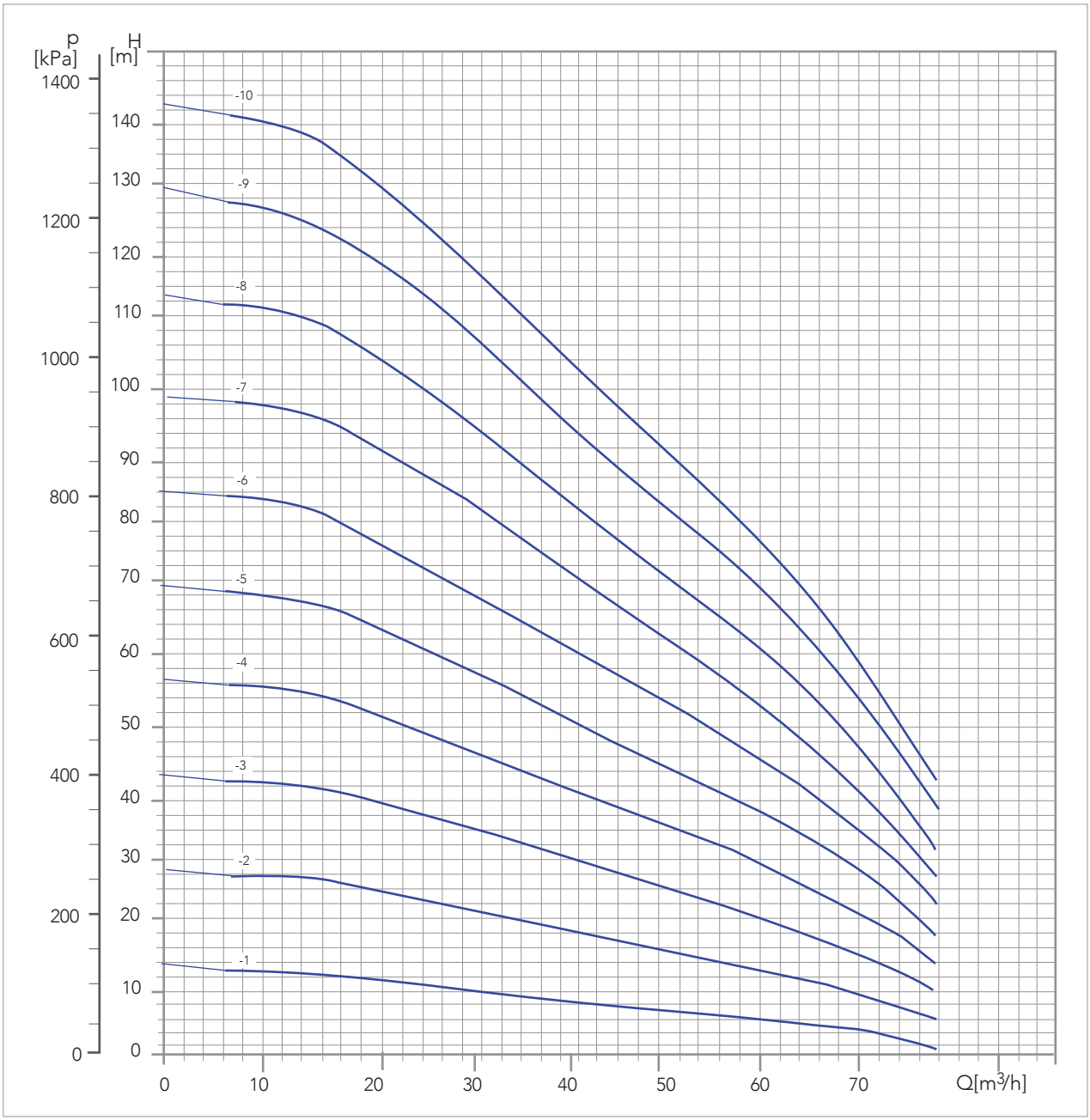

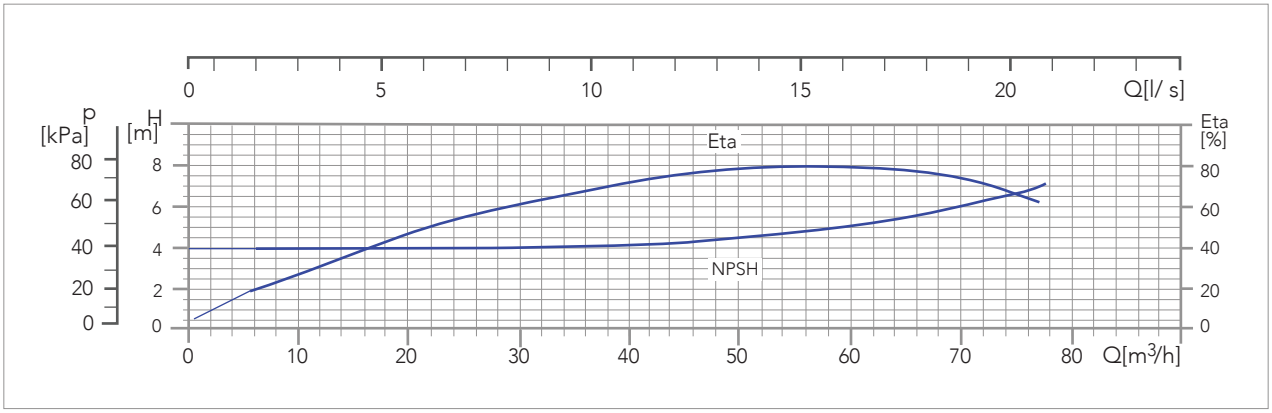

SUBMERSIBLE PUMP
LS 60

According to: ISO 9906 ANNEX A 50Hz 2870 min^{-1}

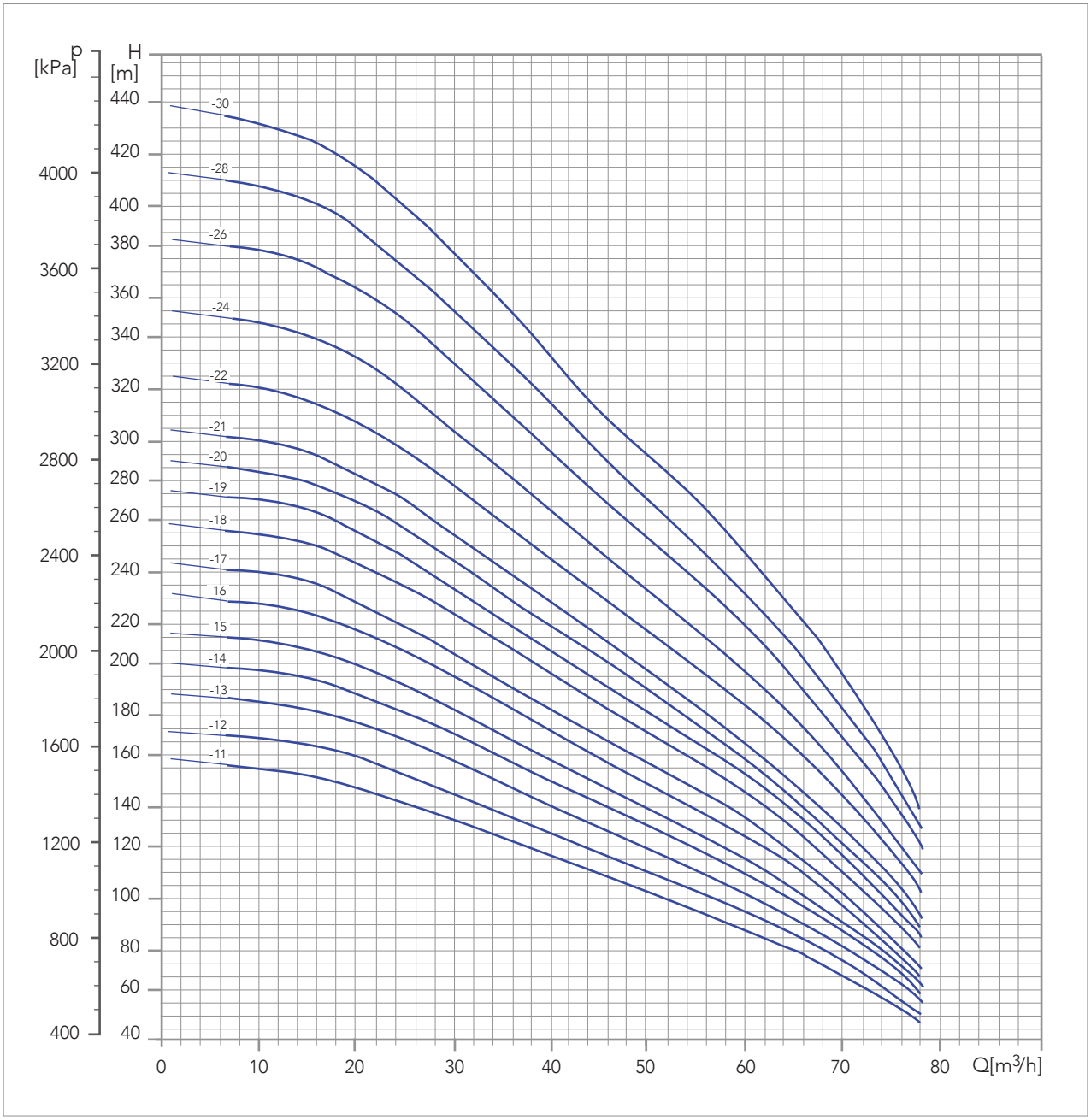

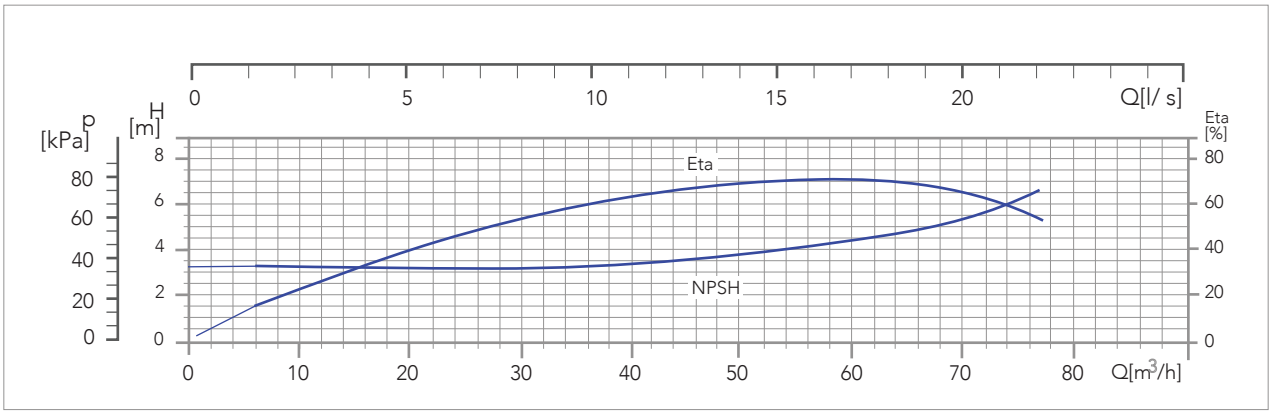

LS 77

Component name

1	Valve casing	17	Strap	78	Nameplate
2	Valve cup	18	Cable guard	79	Rivet
3	Retainer for valve seat	19	Nut	1.d	O-ring
4	Chamber, top	22	Hexagon socket head screw	11.c	Nut
7	Neck ring	23	Rubber guard	18.a	Screw
8	Bearing	28	Lock for strainer	18.b	Screw
12	Split cone	39	Spring	3.a	Retainer for valve seat
13	Impeller complete	70	Valve guide	3.b	Retainer for valve seat
14	Suction interconnector	71	Washer	6.b	Bearing
15	Strainer	72	Wear ring	8.a	Washer
16	Shaft end complete	77	Cover plate	8.b	Stop ring

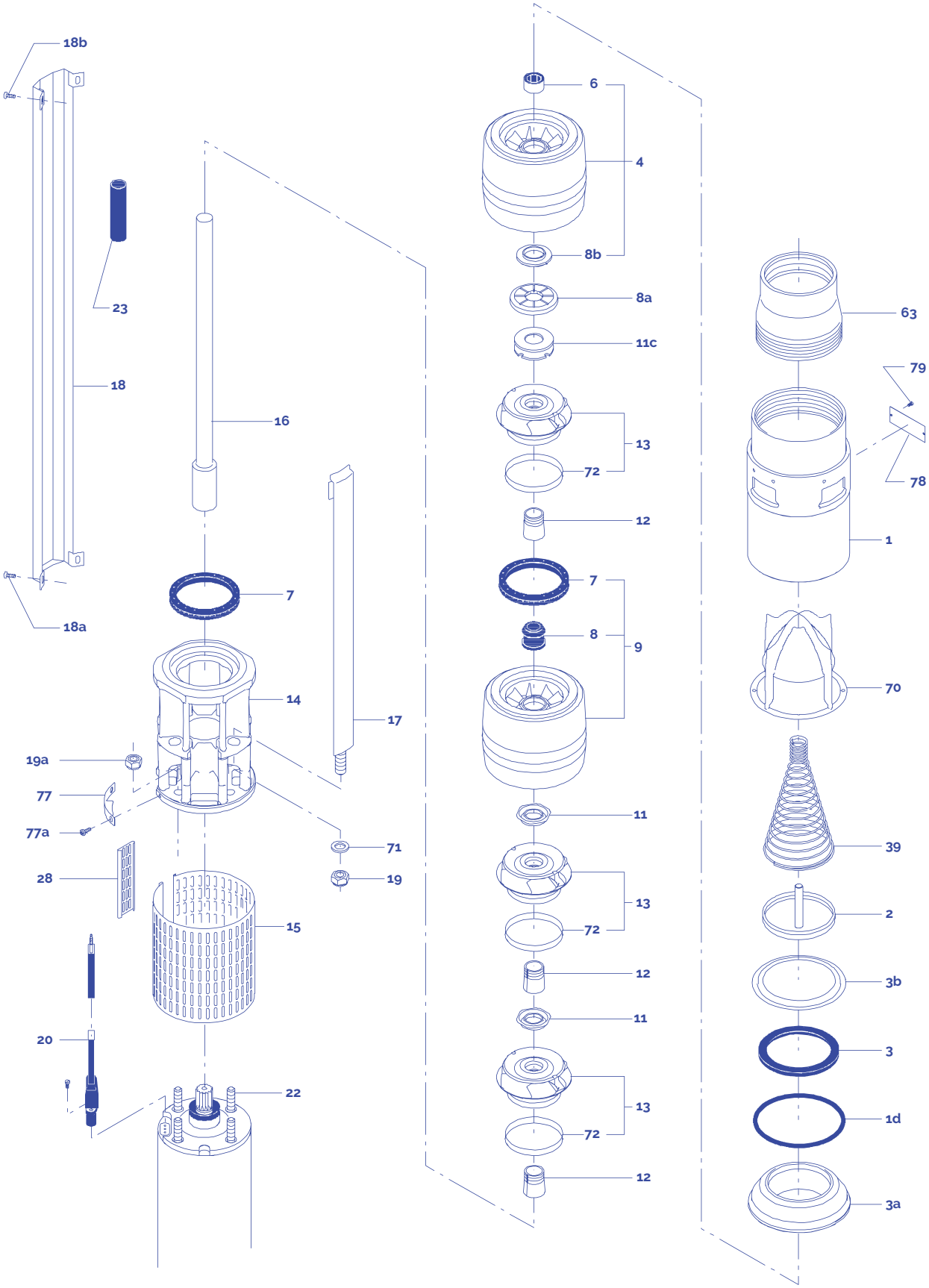
18b
23
18
18a
16
7
14
17
19a
77
77a
28
71
19
15
20
22
6
4
8b
8a
11c
13
72
12
7
8
9
11
13
72
12
11
13
72
12
63
79
78
1
70
39
2
3b
3
1d
3a

SUBMERSIBLE PUMP
LS 77

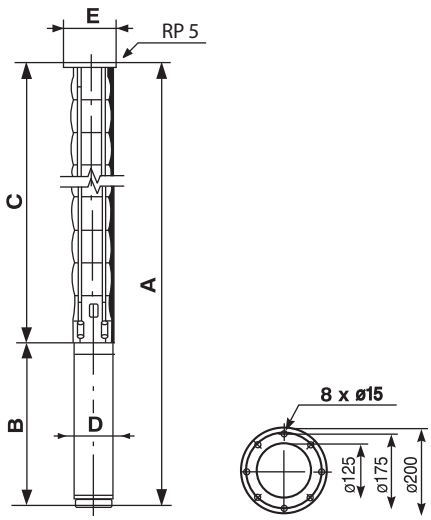

Dimensions & Weights															
Pump Type	Motor		Dimensions [mm]										Weight [Kg]		Net Weight [Kg]
	Type	Power [kW]	Rp 5 Connection				5'' Sandus Flange				B	D	Pump	Motor	
			A	C	E*	E**	A	C	E*	E**					
LS 77 - 1	SRM 6T	5.5	1363	618	178	186	1363	618	200	200	745	138	23	53	76
LS 77 - 2	SRM 6T	7.5	1573	746	178	186	1573	746	200	200	827	138	27	61	88
LS 77 - 3	SRM 6T	11	1814	874	178	186	1814	874	200	200	940	138	31	72	103
LS 77 - 4	SRM 6T	15	2032	1003	178	186	2032	1003	200	200	1029	138	35	82	117
LS 77 - 5	SRM 6T	18.5	2221	1131	178	186	2221	1131	200	200	1090	138	39	90	129
LS 77 - 6	SRM 6T	22	2391	1259	178	186	2391	1259	200	200	1132	138	43	100	143
LS 77 - 7	SRM 6T	26	2569	1387	178	186	2569	1387	200	200	1182	138	47	115	162
LS 77 - 8	Franklin 6"	30	2560	1515	178	186	2560	1515	200	200	1045	136	51	73	124
LS 77 - 9	Franklin 6"	30	2688	1643	178	186	2688	1643	200	200	1045	136	55	73	128
LS 77 - 10	Franklin 6"	37	3186	1771	178	186	3186	1771	200	200	1415	136	59	115	174
LS 77 - 11	Franklin 6"	37	3313	1898	178	186	3313	1898	200	200	1415	136	63	115	178
LS 77 - 12	Franklin 8"	45	3105	2043	200	204	3105	2043	205	205	1062	192	67	143	210
LS 77 - 13	Franklin 8"	55	3376	2172	200	204	3376	2172	205	205	1204	192	71	175	246
LS 77 - 14	Franklin 8"	55	3504	2300	200	204	3504	2300	205	205	1204	192	75	175	250
LS 77 - 15	Franklin 8"	55	3633	2429	200	204					1204	192	79	175	254
LS 77 - 16	Franklin 8"	75	3952	2557	200	204					1395	192	83	210	293
LS 77 - 17	Franklin 8"	75	4080	2685	200	204					1395	192	87	210	297
LS 77 - 18	Franklin 8"	75	4209	2814	200	204					1395	192	91	210	301
LS 77 - 19	Franklin 8"	75	4631	3236	200	204					1395	192	95	210	305
LS 77 - 20	Franklin 8"	75	4759	3364	200	204					1395	192	99	210	309
LS 77 - 21	Franklin 8"	75	4887	3492	200	204					1395	192	103	210	313
LS 77 - 22	Franklin 8"	93	5367	3620	200	204					1747	192	107	291	398

E* = Maximum diameter of pump with one motor cable.
E** = Maximum diameter of pump with two motor cables.

SUBMERSIBLE PUMP
LS 77

Motor	Pump Type	Flow Q									
		m^3/h		0	15	30	45	60	75	90	100
		l/sec		0	4.2	8	13	17	21	25	28
		l/min		0	250	500	750	1000	1250	1500	1667
		Power		Head H [Meter]							
		[kW]	[HP]								
6″	LS 77 - 1	5.5	7.5	21.5	20.5	18.5	16.1	14.3	12.5	9.71	7.82
	LS 77 - 2	7.5	10	41.2	40.1	36.8	32.5	28.7	25	19.2	15.9
	LS 77 - 3	11	15	61.1	59.9	55.4	49.1	43.4	37.7	29	24.4
	LS 77 - 4	15	20	81.1	79.9	74.1	65.9	58.3	50.6	39	32.7
	LS 77 - 5	18.5	25	101	99.7	92.7	82.5	73	63.3	48.9	41.1
	LS 77 - 6	22	30	121	120	111	99.1	87.7	76	58.7	49.1
	LS 77 - 7	26	35	141	140	130	116	103	88.9	68.7	57.3
	LS 77 - 8	30	40	161	160	149	133	117	102	78.6	66.2
	LS 77 - 9	30	40	180	178	166	148	131	113	87.3	74.1
	LS 77 - 10	37	50	201	199	186	166	147	127	98.3	82.2
	LS 77 - 11	37	50	220	218	203	181	160	139	107	89.9
8″	LS 77 - 12	45	60	241	239	223	199	176	153	118	98
	LS 77 - 13	55	75	262	260	243	218	193	167	130	107
	LS 77 - 14	55	75	281	280	261	233	207	179	139	116
	LS 77 - 15	75	100	300	299	279	249	220	191	148	123
	LS 77 - 16	75	100	323	322	301	269	239	208	162	133
	LS 77 - 17	75	100	343	341	319	285	253	220	171	141
	LS 77 - 18	75	100	362	360	337	301	267	232	180	148
	LS 77 - 19	75	100	381	379	355	317	281	243	189	157
	LS 77 - 20	75	100	401	398	372	333	295	255	197	163
	LS 77 - 21	75	100	420	417	390	349	308	267	206	172
	LS 77 - 22	93	125	422	440	412	369	326	283	220	180

SUBMERSIBLE PUMP
LS 77

According to: ISO 9906 ANNEX A 50Hz 2870 min^{-1}

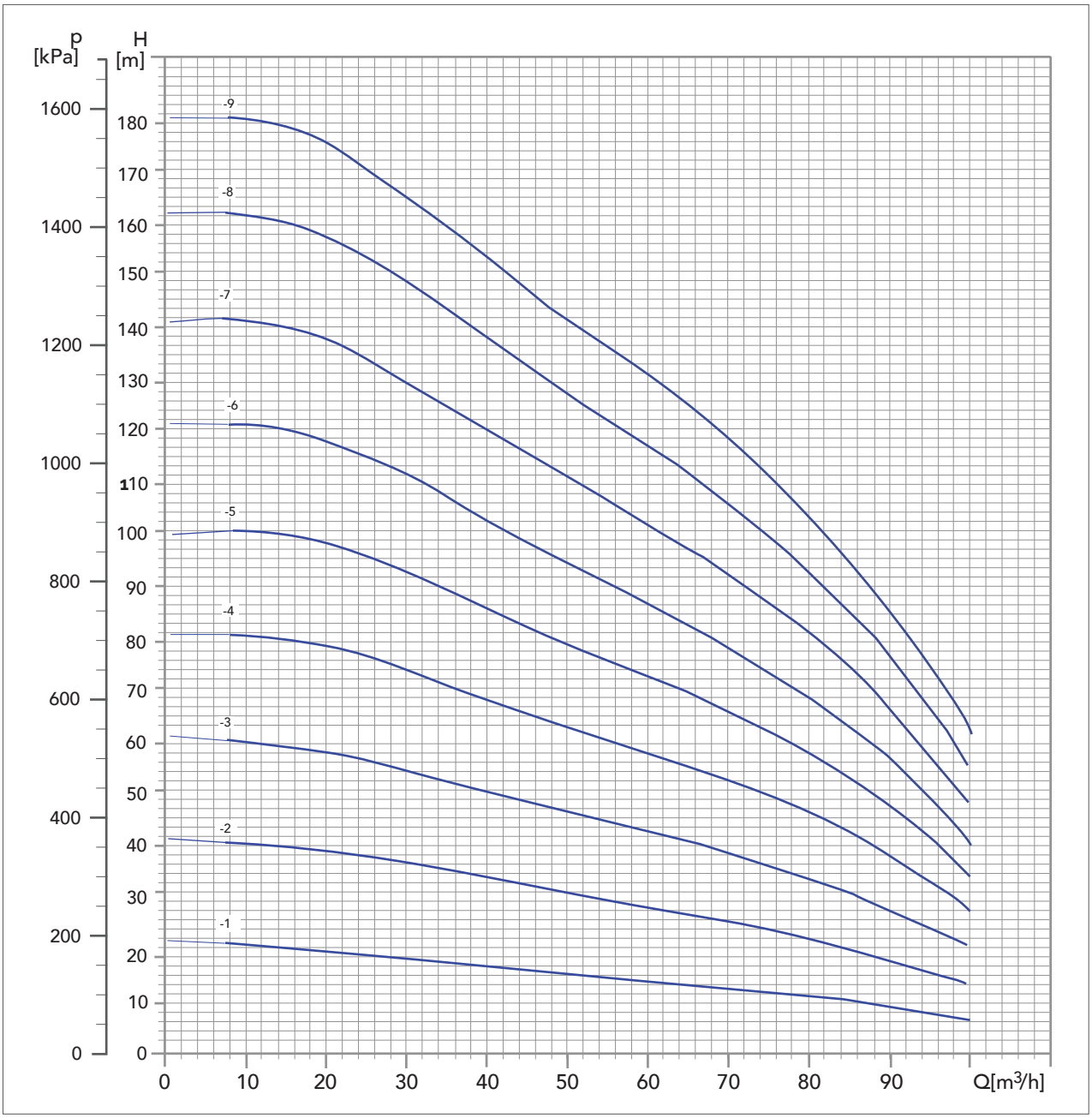

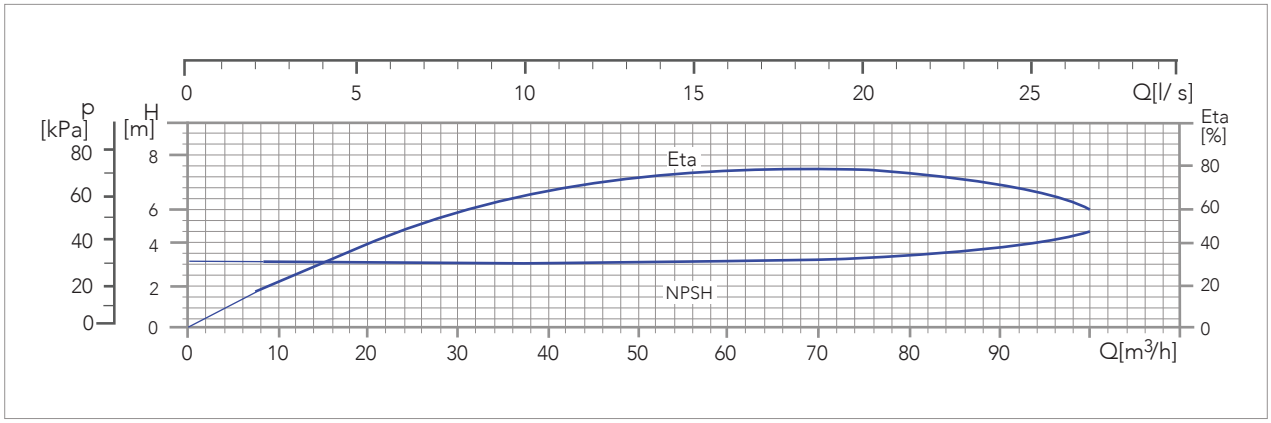

SUBMERSIBLE PUMP
LS 77

According to: ISO 9906 ANNEX A 50Hz 2870 min^{-1}

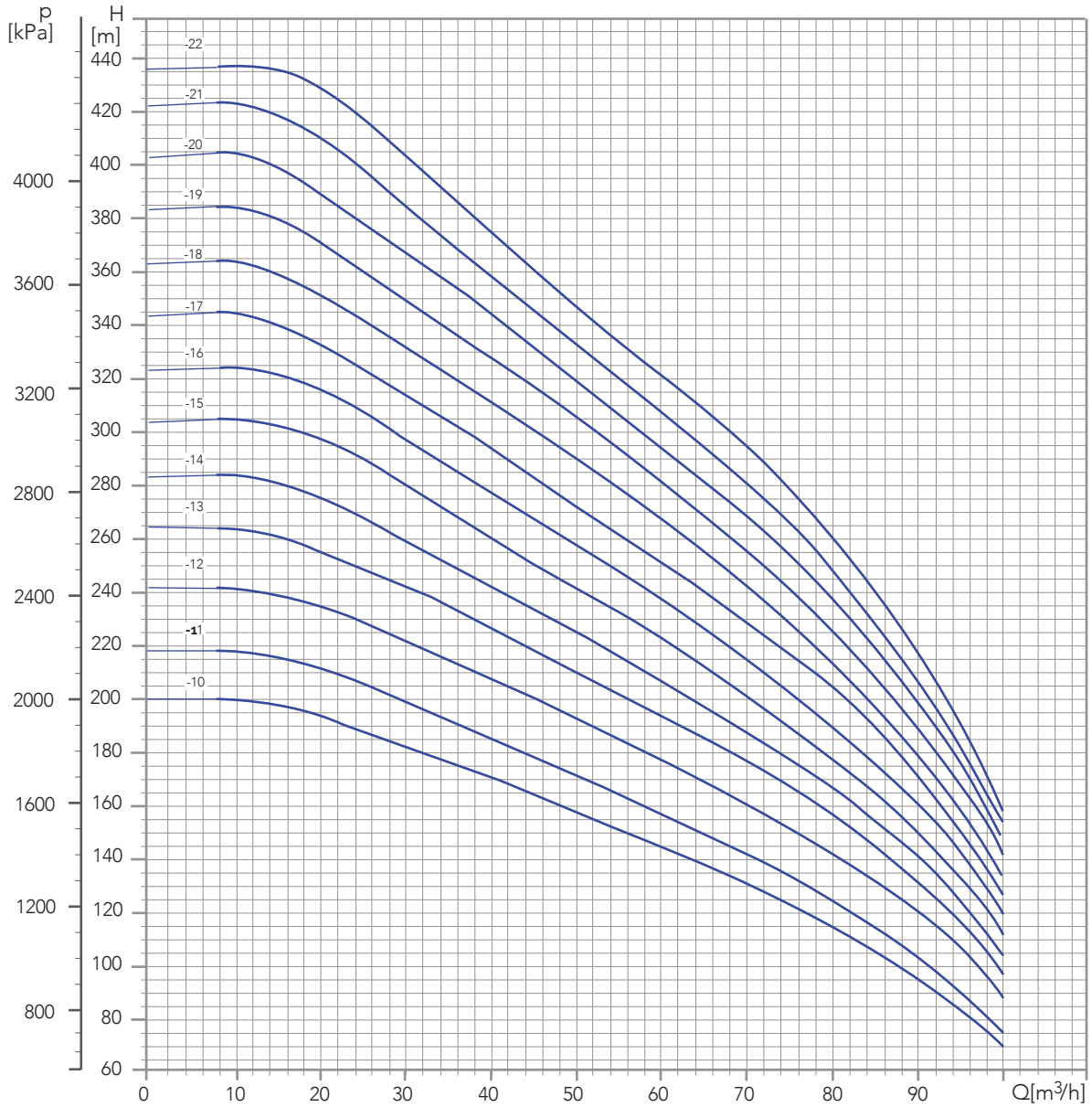

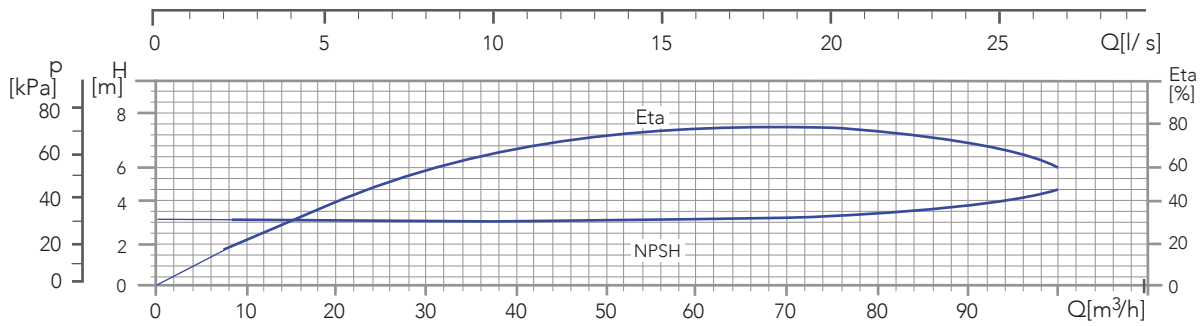

LS 95

Component name

1	Valve casing
2	Valve cup
3	Retainer for valve seat
4	Chamber, top
7	Neck ring
8	Bearing
12	Split cone
13	Impeller complete
14	Suction interconnector
15	Strainer
16	Shaft end complete

17	Strap
18	Cable guard
19	Nut
22	Hexagon socket head screw
23	Rubber guard
28	Lock for strainer
39	Spring
70	Valve guide
71	Washer
72	Wear ring
77	Cover plate

78	Nameplate
79	Rivet
1.d	O-ring
11.c	Nut
18.a	Screw
18.b	Screw
3.a	Retainer for valve seat
3.b	Retainer for valve seat
6.b	Bearing
8.a	Washer
8.b	Stop ring

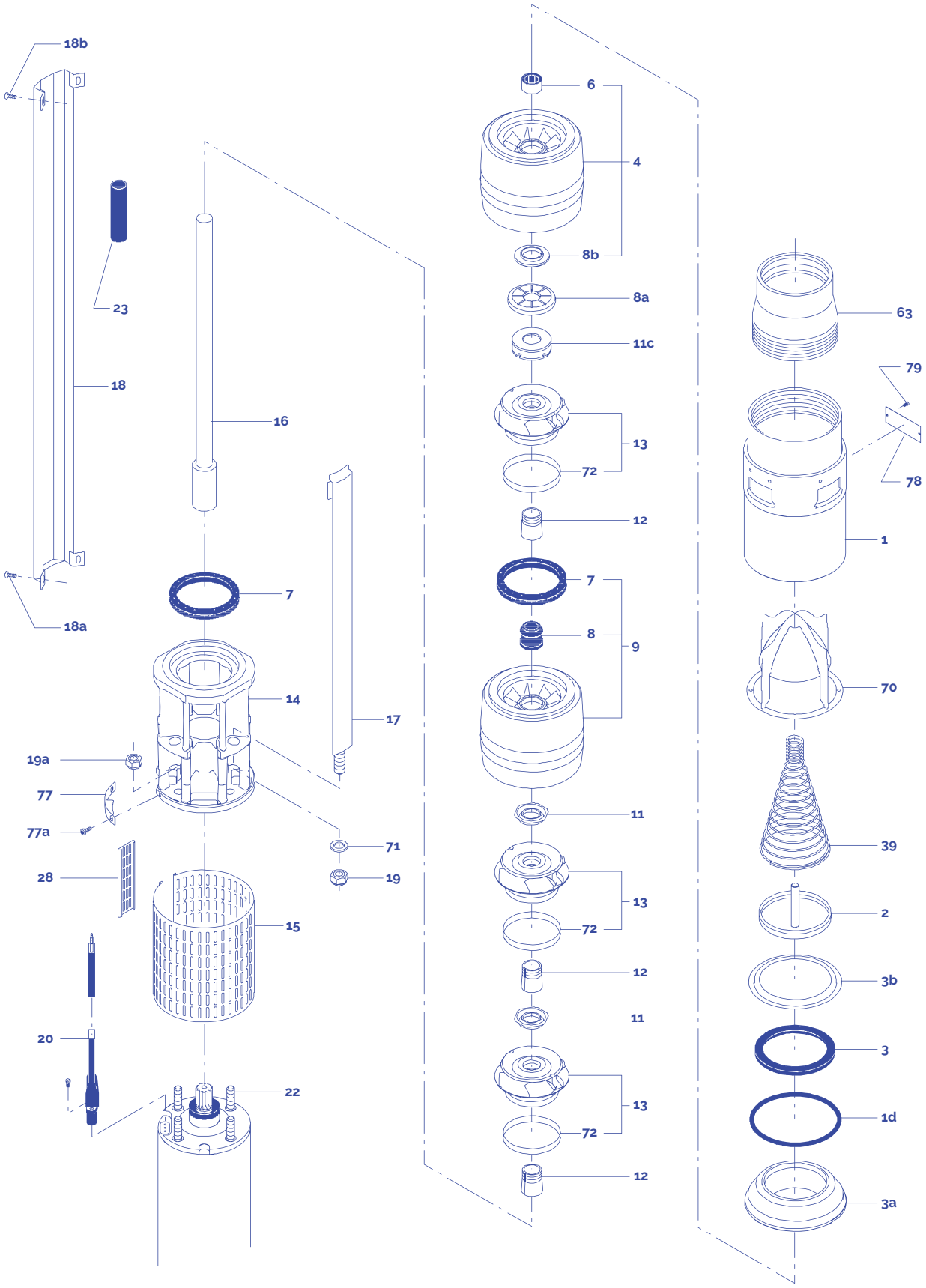
18b
23
18
18a
16
7
14
17
19a
77
77a
28
71
19
15
20
22
6
4
8b
8a
11c
13
72
12
7
8
9
11
13
72
12
11
13
72
12
63
79
78
1
70
39
2
3b
3
1d
3a

SUBMERSIBLE PUMP
LS 95

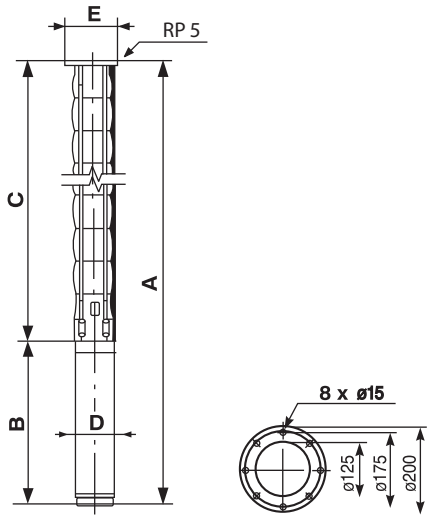

Dimensions & Weights															
Pump Type	Motor		Dimensions [mm]										Weight [Kg]		Net Weight [Kg]
	Type	Power [kW]	Rp 5 Connection				5" Sandus Flange				B	D	Pump	Motor	
			A	C	E*	E**	A	C	E*	E**					
LS 95 - 1	SRM 6T	5.5	1363	618	178	186	1363	618	200	200	745	138	22	53	75
LS 95 - 2	SRM 6T	9.2	1621	746	178	186	1621	746	200	200	875	138	25	66	91
LS 95 - 3	SRM 6T	13	1851	874	178	186	1851	874	200	200	977	138	28	77	105
LS 95 - 4	SRM 6T	18.5	2093	1003	178	186	2093	1003	200	200	1090	138	32	90	122
LS 95 - 5	SRM 6T	22	2263	1131	178	186	2263	1131	200	200	1132	138	35	100	135
LS 95 - 6	SRM 6T	26	2441	1259	178	186	2441	1259	200	200	1182	138	39	115	154
LS 95 - 7	Franklin 6"	30	2432	1387	178	186	2432	1387	200	200	1045	136	42	73	115
LS 95 - 8	Franklin 6"	37	2930	1515	178	186	2930	1515	200	200	1415	136	46	115	161
LS 95 - 9	Franklin 6"	37	3057	1642	178	186	3057	1642	200	200	1415	136	49	115	164
LS 95 - 10	Franklin 8"	45	2847	1785	196	204	2847	1785	205	205	1062	192	52	143	195
LS 95 - 11	Franklin 8"	55	3118	1914	196	204	3118	1914	205	205	1204	192	55	175	230
LS 95 - 12	Franklin 8"	55	3247	2043	196	204	3247	2043	205	205	1204	192	59	175	234
LS 95 - 13	Franklin 8"	55	3376	2172	196	204	3376	2172	205	205	1204	192	62	175	237
LS 95 - 14	Franklin 8"	75	3695	2300	178	186	3695	2300	205	205	1395	192	65	210	275
LS 95 - 15	Franklin 8"	75	3824	2429	196	204					1395	192	68	210	278
LS 95 - 16	Franklin 8"	75	3952	2557	196	204					1395	192	72	210	282
LS 95 - 17	Franklin 8"	75	4080	2685	196	204					1395	192	76	210	286
LS 95 - 18	Franklin 8"	93	4855	3108	196	204					1747	192	80	291	371
LS 95 - 19	Franklin 8"	93	4983	3236	196	204					1747	192	84	291	375
LS 95 - 20	Franklin 8"	93	5111	3364	196	204					1747	192	87	291	378

E* = Maximum diameter of pump with one motor cable.
E** = Maximum diameter of pump with two motor cables.

SUBMERSIBLE PUMP
LS 95

Motor	Pump Type	Flow Q									
		m^3/h		0	15	35	55	70	85	95	120
		l/sec		0	4.20	9.7	15.3	19	23.6	26.4	33
		l/min		0	250	583.3	916.7	1166.7	1416.7	1583.3	2000
		Power		Head H [Meter]							
		[kW]	[HP]								
6″	LS 95 - 1	5.5	7.5	23	22	19	16.1	14.6	13.1	11.9	6.77
	LS 95 - 2	9.2	12.5	44	42.5	37.7	32.6	29.6	26.6	24.1	13.9
	LS 95 - 3	13	17.5	64.9	63.1	56.5	49.1	44.6	40.2	36.2	21
	LS 95 - 4	18.5	25	86.2	84	75.7	66	60	54.1	48.8	28.5
	LS 95 - 5	22	30	107	104	94.4	82.4	74.9	67.5	60.9	35.3
	LS 95 - 6	26	35	128	125	113	98.9	90	81.1	73.1	43.1
	LS 95 - 7	30	40	149	146	132	115	105	94.6	85.3	49.6
	LS 95 - 8	37	50	171	167	152	133	121	109	98.2	56.7
	LS 95 - 9	37	50	191	187	169	148	135	121	109	64.6
8″	LS 95 - 10	45	60	213	208	189	166	151	136	123	71.7
	LS 95 - 11	55	75	235	230	209	183	167	151	136	78.9
	LS 95 - 12	55	75	255	250	227	199	181	164	148	87.4
	LS 95 - 13	55	75	275	269	245	215	196	176	159	91.7
	LS 95 - 14	75	100	299	293	267	234	214	193	175	102
	LS 95 - 15	75	100	320	313	285	250	228	206	186	108
	LS 95 - 16	75	100	340	333	304	266	242	219	197	115
	LS 95 - 17	75	100	360	353	321	282	257	231	209	122
	LS 95 - 18	93	125	384	376	343	301	274	248	224	130
	LS 95 - 19	93	125	404	396	361	317	289	260	235	137
	LS 95 - 20	93	125	424	416	379	332	303	273	246	144

SUBMERSIBLE PUMP
LS 95

According to: ISO 9906 ANNEX A 50Hz 2870 min^{-1}

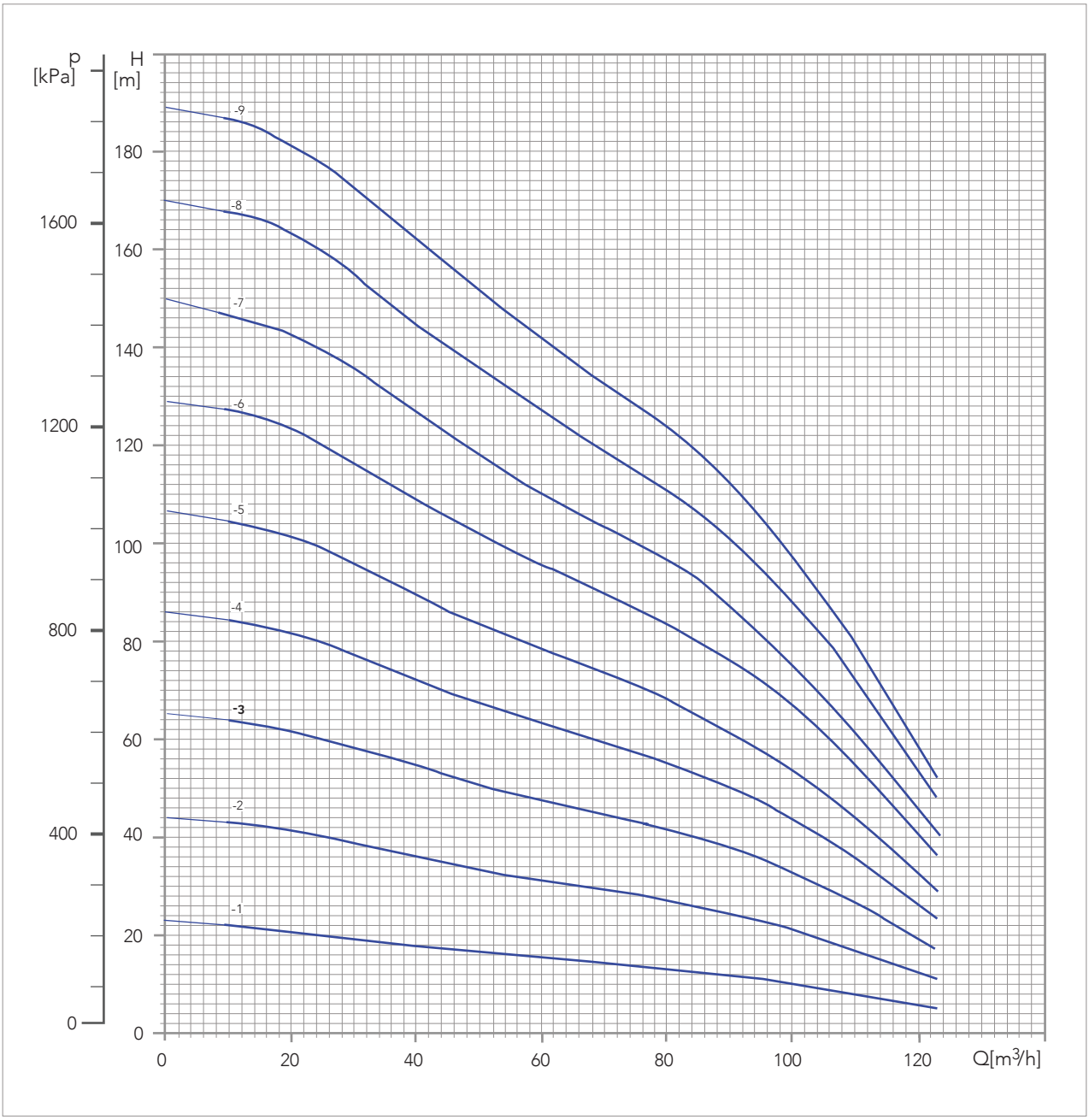

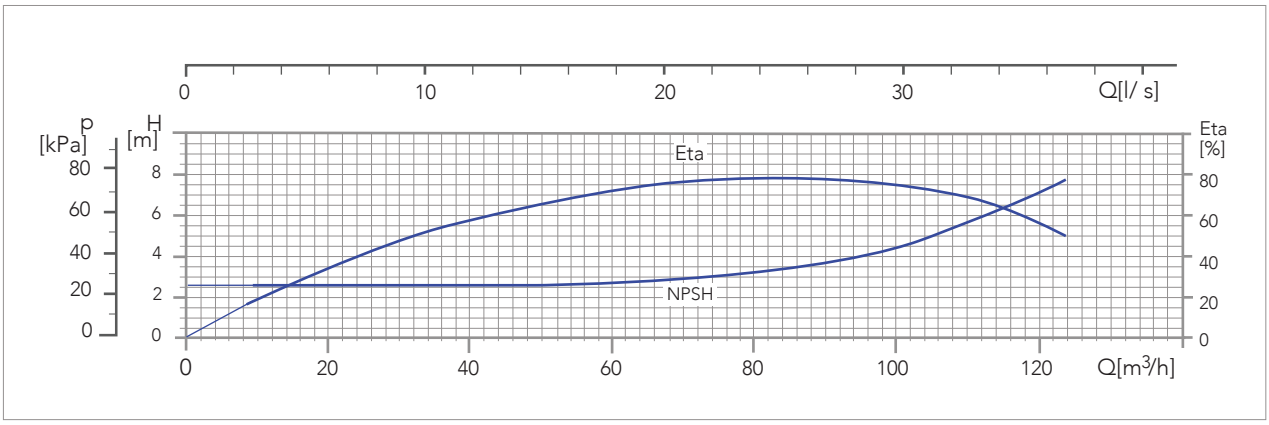

SUBMERSIBLE PUMP
LS 95

According to: ISO 9906 ANNEX A 50Hz 2870 min^{-1}

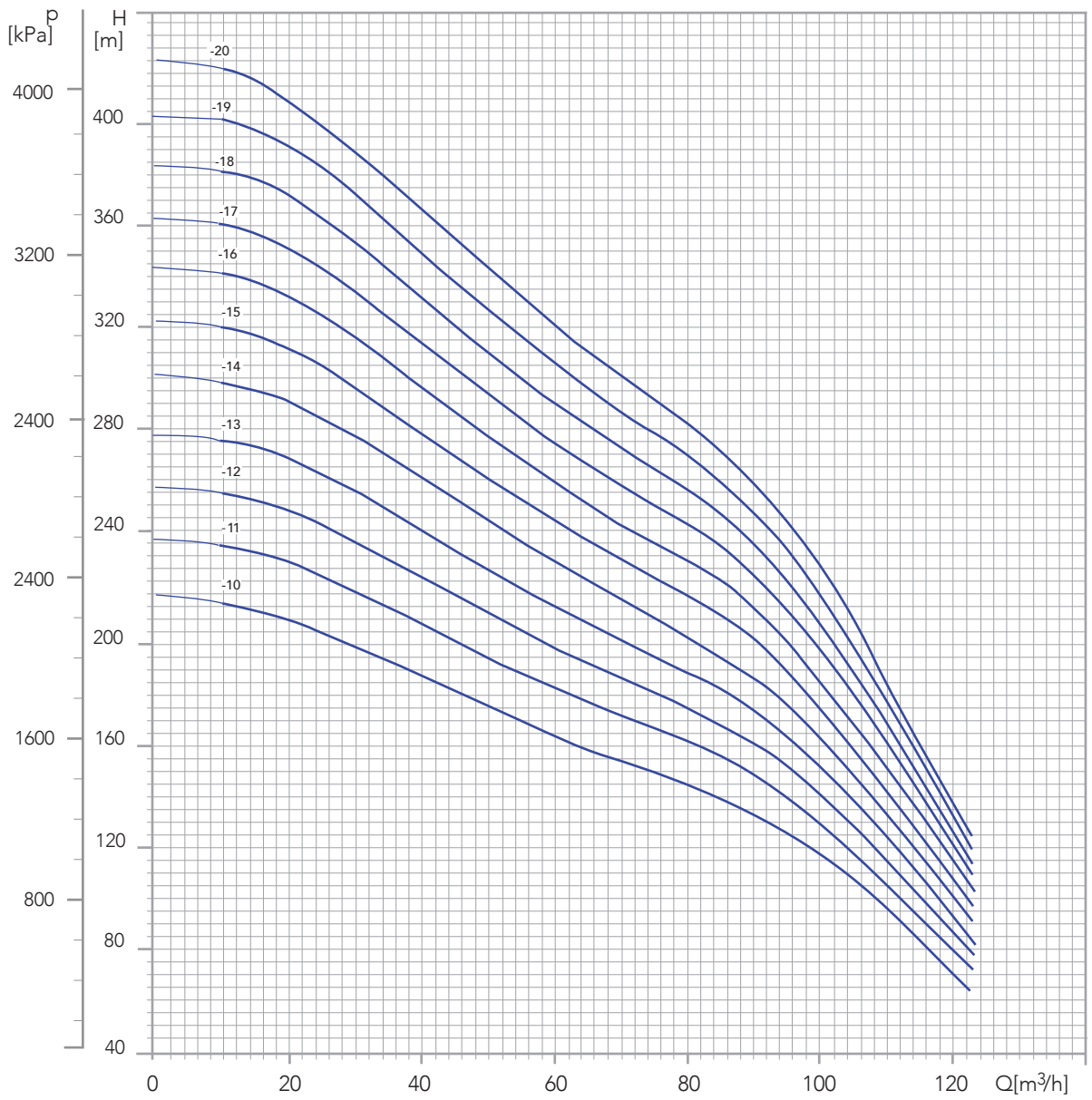

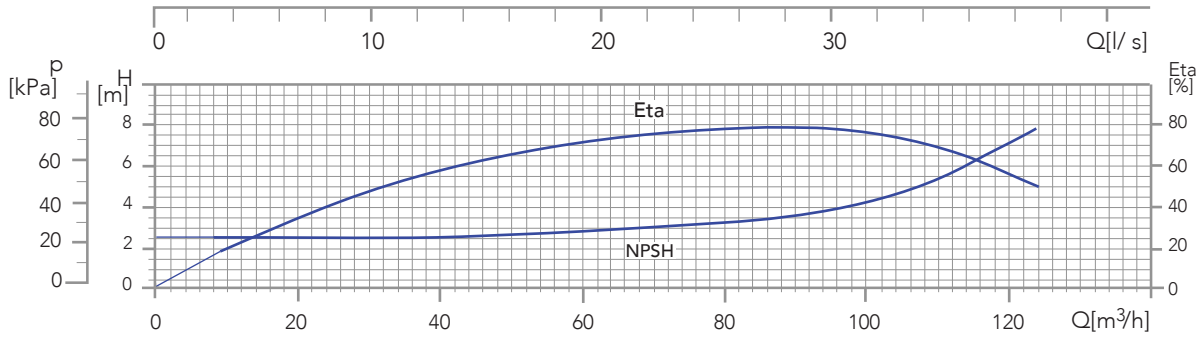

TABLE OF HEAD LOSSES

SUBMERSIBLE PUMP LSA LS

Head Losses in Ordinary Water Pipes

Small figure indicates the velocity of water in m/sec.
Large figures indicates head loss in meters per 100 meter of straight pipes.

Miscellaneous

Quality of water			Head Losses in Ordinary Water Pipes											
			Norminal Pipe Diameter in inches and Internal Diameter in [mm]											
m³/h	litres/ min.	Litres/ sec.	1/2 ″ 15.75	3/4 ″ 21.25	1″ 27.00	1 1/4 ″ 35.75	1 1/2 ″ 41.25	2″ 52.50	2 1/2 ″ 68.00	3″ 80.25	3 1/2 ″ 92.50	4″ 105.0	5″ 130.0	6″ 155.5
0.6	10	0.16	0.855 9.910	0.470 2.407	0.292 0.784									
0.9	15	0.25	1.282 20.11	0.705 4.862	0.438 1.570	0.249 0.416								
1.2	20	0.33	1.710 33.53	0.940 8.035	0.584 2.588	0.331 0.677	0.249 0.346							
1.5	25	0.42	2.138 49.93	1.174 11.91	0.730 3.834	0.415 1.004	0.312 0.510							
1.8	30	0.50	2.565 69.34	1.409 16.50	0.876 5.277	0.498 1.379	0.374 0.700	0.231 0.223						
2.1	35	0.58	2.993 91.54	1.644 21.75	1.022 6.949	0.581 1.811	0.436 0.914	0.269 0.291						
2.4	40	0.67		1.879 27.66	1.168 8.820	0.664 2.290	0.499 1.160	0.308 0.368						
3.0	50	0.83		2.349 41.40	1.460 13.14	0.830 3.403	0.623 1.719	0.385 0.544	0.229 0.159					
3.6	60	1.00		2.819 57.74	1.751 18.28	0.996 4.718	0.748 2.375	0.462 0.751	0.275 0.218					
4.2	70	1.12		3.288 76.49	2.043 24.18	1.162 6.231	0.873 3.132	0.539 0.988	0.321 0.287	0.231 0.131				
4.8	80	1.33			2.335 30.87	1.328 7.940	0.997 3.988	0.616 1.254	0.367 0.363	0.263 6.164				
5.4	90	1.50			2.627 38.30	1.494 9.828	1.122 4.927	0.693 1.551	0.413 0.449	0.269 0.203				
6.0	100	1.67			2.919 46.49	1.660 11.90	1.247 5.972	0.770 1.875	0.459 0.542	0.329 0.244	0.248 0.124			
7.5	125	2.08			3.649 70.41	2.075 17.93	1.558 8.967	0.962 2.802	0.574 0.809	0.412 0.365	0.310 0.185	0.241 0.101		
9.0	150	2.50				2.490 25.11	1.870 12.53	1.154 3.903	0.668 1.124	0.494 0.506	0.372 0.256	0.289 0.140		
10.5	175	2.92				2.904 33.32	2.182 16.66	1.347 5.179	0.803 1.488	0.576 0.670	0.434 0.338	0.337 0.184		
12	200	3.33				3.319 42.75	2.493 21.36	1.539 6.624	0.918 1.901	0.659 0.855	0.496 0.431	0.385 0.234	0.251 0.084	
15	250	4.17				4.149 64.86	3.117 32.32	1.924 10.03	1.147 2.860	0.823 1.282	0.620 0.646	0.481 0.350	0.314 0.126	
18	300	5.00					3.740 45.52	2.309 14.04	1.377 4.009	0.988 1.792	0.744 0.903	0.577 0.488	0.377 0.175	0.263 0.074
24	400	6.67					4.987 78.17	3.078 24.04	1.836 6.828	1.317 3.053	0.992 1.530	0.770 0.829	0.502 0.294	0.351 0.124
30	500	8.33						3.848 36.71	2.295 10.40	1.647 4.622	1.240 2.315	0.962 1.254	0.628 0.445	0.439 0.187
36	600	10.0						4.618 51.84	2.753 14.62	1.976 6.505	1.488 3.261	1.155 1.757	0.753 0.623	0.526 0.260
42	700	11.7							3.212 19.52	2.306 8.693	1.736 4.356	1.347 2.345	0.879 0.831	0.614 0.347
48	800	13.3							3.671 25.20	2.635 11.18	1.984 5.582	1.540 3.009	1.005 1.066	0.702 0.445
54	900	15.0							4.130 31.51	2.964 13.97	2.232 6.983	1.732 3.762	1.130 1.328	0.790 0.555
60	1000	16.7							4.589 38.43	3.294 17.06	2.480 8.521	1.925 4.595	1.256 1.616	0.877 0.674
75	1250	20.8								4.117 26.10	3.100 13.00	2.406 7.010	1.570 2.458	1.097 1.027
90	1500	25.0								4.941 36.97	3.720 18.42	2.887 9.892	1.883 3.468	1.316 1.444
105	1750	29.2									4.340 24.76	3.368 13.30	2.197 4.665	1.535 1.934
120		33.3									4.960 31.94	3.850 17.16	2.511 5.995	1.754 2.496
150	2500	41.7										4.812 26.26	3.139 9.216	2.193 3.807
180		50.0											3.767 13.05	2.632 5.417
240		66.7											5.023 22.72	3.509 8.926
300		83.3												4.386 14.42
90 Bend, Side Valves			1.0	1.0	1.1	1.2	1.3	1.4	1.5	1.6	1.6	1.7	2.0	2.5
T-pieces. Non-return Valves			4.0	4.0	4.0	5.0	5.0	5.0	6.0	6.0	6.0	7.0	8.0	9.0

The table is calculated in accordance with H. Lang's new formula a = 0.02 and for a water temperature of 10 °C
The head loss in bends. slide vaves. T-pieces and non-return valves is equivalent to the metres of straight pipes stated in last two lines of the table. To find the head loss in foot valves multiply the loss in T-pieces by two.

SUBMERSIBLE PUMP
LSA LS

Head Losses in Plastic Pipes

Small figure indicates the velocity of water in m/sec.
Large figures indicates head loss in meters per 100 meter of straight pipes.

Miscellaneous

Quality of water			PELM/PEH PN 10											
			PELM				PEH							
m^3/h	litres/ min.	Litres/ sec.	25 20.4	32 26.2	40 32.6	50 40.8	63 51.4	75 61.4	90 73.6	110 90.0	125 102.2	140 114.6	160 130.8	180 147.2
0.6	10	0.16	0.49 1.8	0.30 0.66	0.19 0.27	0.12 0.085								
0.9	15	0.25	0.76 4.0	0.46 1.14	0.3 0.6	0.19 0.18	0.12 0.63							
1.2	20	0.33	1.0 6.4	0.61 2.2	0.39 0.9	0.25 0.28	0.16 0.11							
1.5	25	0.42	1.3 10.0	0.78 3.5	0.5 1.4	0.32 0.43	0.2 0.17	0.14 0.074						
1.8	30	0.50	1.53 13.0	0.93 4.6	0.6 1.9	0.38 0.57	0.24 0.22	0.17 0.092						
2.1	35	0.58	1.77 16.0	1.08 6.0	0.69 2.0	0.44 0.70	0.28 0.27	0.2 0.12						
2.4	40	0.67	2.05 22.0	1.24 7.5	0.80 3.3	0.51 0.93	0.32 0.35	0.23 0.16	0.16 0.063					
3.0	50	0.83	2.54 37.0	1.54 11.0	0.99 4.8	0.63 1.40	0.4 0.50	0.28 0.22	0.2 0.09					
3.6	60	1.00	3.06 43.0	1.85 15.0	1.2 6.5	0.76 1.90	0.48 0.70	0.34 0.32	0.24 0.13	0.16 0.050				
4.2	70	1.12	3.43 50.0	2.08 18.0	1.34 8.0	0.86 2.50	0.54 0.83	0.38 0.38	0.26 0.17	0.18 0.068				
4.8	80	1.33		2.47 25.0	1.59 10.5	1.02 3.00	0.64 1.20	0.45 0.50	0.31 0.22	0.2 0.084				
5.4	90	1.50		2.78 30.0	1.8 12.0	1.15 3.50	0.72 1.30	0.51 0.57	0.35 0.26	0.24 0.092	0.18 0.05			
6.0	100	1.67		3.1 39.0	2.0 16.0	1.28 4.6	0.8 1.80	0.56 0.73	0.39 0.30	0.26 0.12	0.2 0.07			
7.5	125	2.08		3.86 50.0	2.49 24.0	1.59 6.6	1.00 2.50	0.70 1.10	0.49 0.50	0.33 0.18	0.25 0.10	0.20 0.055		
9.0	150	2.50			3.0 33.0	1.91 8.6	1.20 3.5	0.84 1.40	0.59 0.63	0.39 0.24	0.30 0.13	0.24 0.075		
10.5	175	2.92			3.5 38.0	2.23 11.0	1.41 4.3	0.99 1.80	0.69 0.78	0.46 0.30	0.36 0.18	0.28 0.09		
12	200	3.33			3.99 50.0	2.55 14.0	1.60 5.5	1.12 2.40	0.78 1.0	0.52 0.40	0.41 0.22	0.32 0.12	0.25 0.065	
15	250	4.17				3.19 21.0	2.01 8.0	1.41 3.70	0.98 1.50	0.66 0.57	0.51 0.34	0.40 0.18	0.31 0.105	0.25 0.06
18	300	5.00				3.82 28.0	2.41 10.5	1.69 4.60	1.18 1.95	0.78 0.77	0.61 0.45	0.48 0.25	0.37 0.13	0.29 0.085
24	400	6.67					3.21 19.0	2.25 8.0	1.57 3.60	1.05 1.40	0.81 0.78	0.65 0.44	0.50 0.23	0.39 0.15
30	500	8.33					4.01 28.0	2.81 11.5	1.96 5.0	1.1 2.0	1.02 1.20	0.81 0.63	0.62 0.33	0.49 0.21
36	600	10.0					4.82 37.0	3.38 15.0	2.35 6.6	1.57 2.60	1.22 1.50	0.97 0.82	0.74 0.45	0.59 0.28
42	700	11.7					5.64 47.0	3.95 24.0	2.75 8.0	1.84 3.50	1.43 1.90	1.13 1.10	0.87 0.60	0.69 0.40
48	800	13.3						4.49 26.0	3.13 11.0	2.09 4.5	1.62 2.60	1.29 1.40	0.99 0.81	0.78 0.48
54	900	15.0						5.07 33.0	3.53 13.5	2.36 5.5	1.83 3.20	1.45 1.70	1.12 0.95	0.08 0.58
60	1000	16.7						5.64 40.0	3.93 16.0	2.63 6.7	2.04 3.90	1.62 2.2	1.24 1.2	0.96 0.75
75	1250	20.8							4.89 25.0	3.27 9.0	2.54 5.0	2.02 3.0	1.55 1.6	1.22 0.95
90	1500	25.0							5.88 33.0	3.93 13.0	3.05 8.0	2.42 4.1	1.86 2.3	1.47 1.40
105	1750	29.2							6.86 44.0	4.59 17.5	3.56 9.7	2.83 5.7	2.17 3.2	1.72 1.9
120	2000	33.3								5.23 23.0	4.06 13.0	3.23 7.0	2.48 4.0	1.96 2.4
150	2500	41.7								6.55 34.0	5.08 18.0	4.04 10.5	3.10 6.0	2.45 3.5
180	3000	50.0								7.86 45.0	6.1 27.0	4.85 14.0	3.72 7.6	2.94
240	4000	66.7									8.13 43.0	6.47 24.0	4.96 13.0	3.92 7.5
300	5000	83.3										8.08 33.0	6.2 18.0	4.89 11.0

The table is based on a nomogram
Roughness: K = 0.01 mm
Water Temperature: t = 10 °C

COMPONENTS









POSSIBLE SOLUTIONS BY MEANS OF SUBMERSIBLE PUMPS

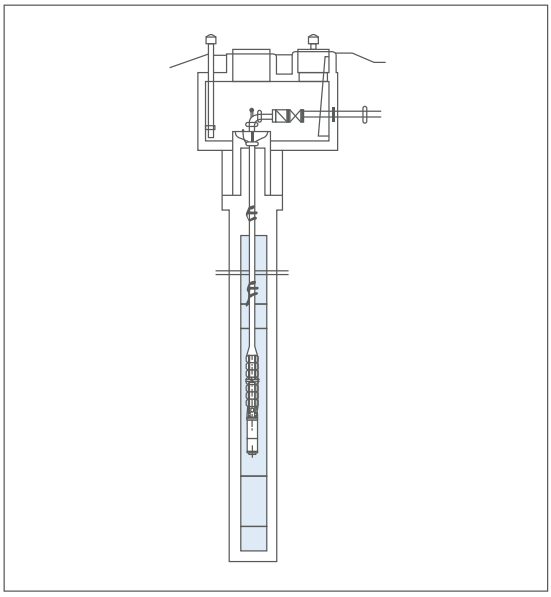

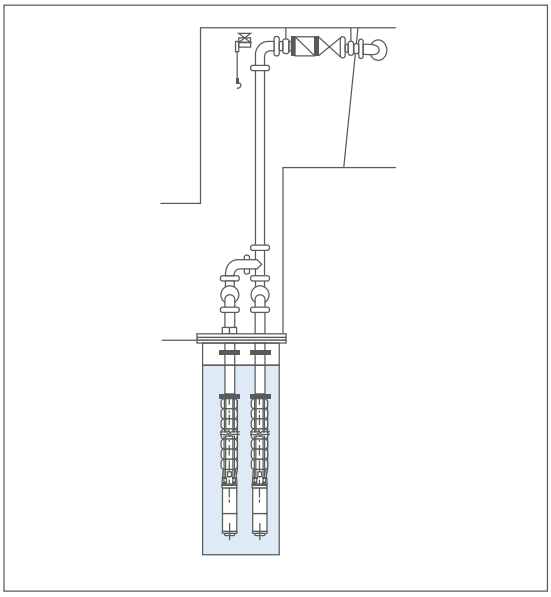

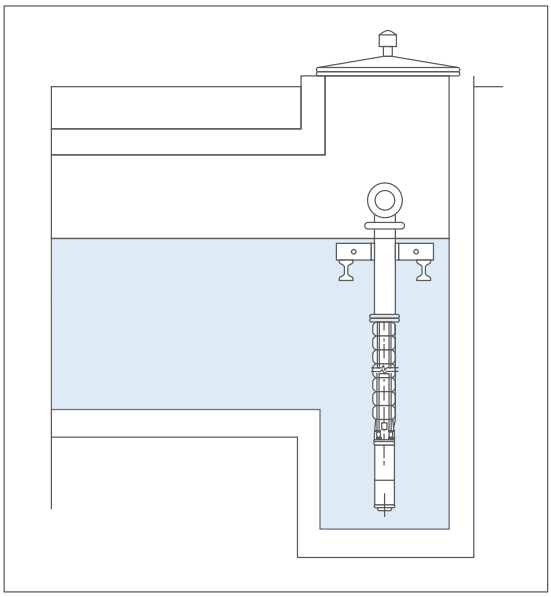

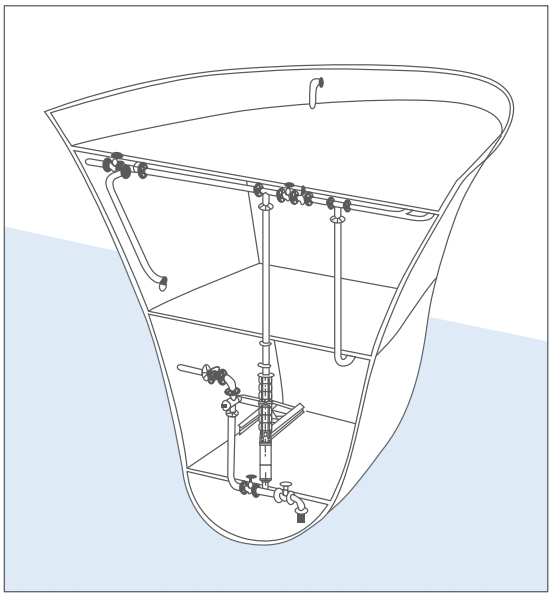

POSSIBLE SOLUTIONS BY MEANS OF SUBMERSIBLE PUMPS

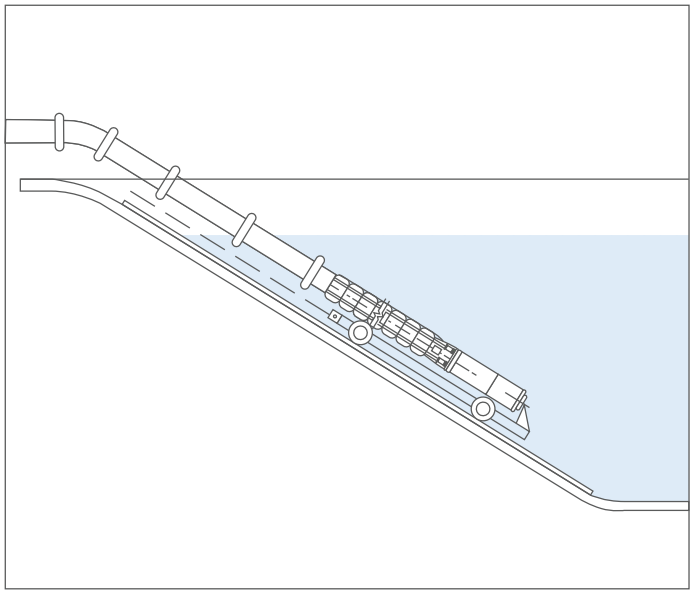

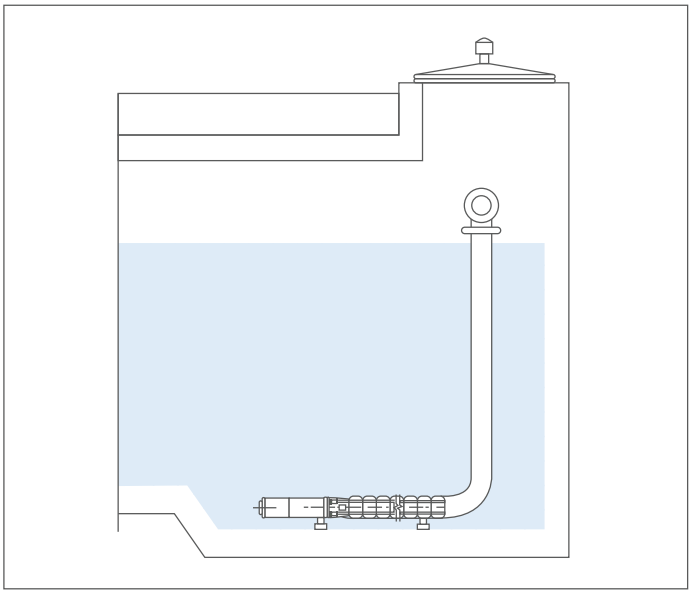

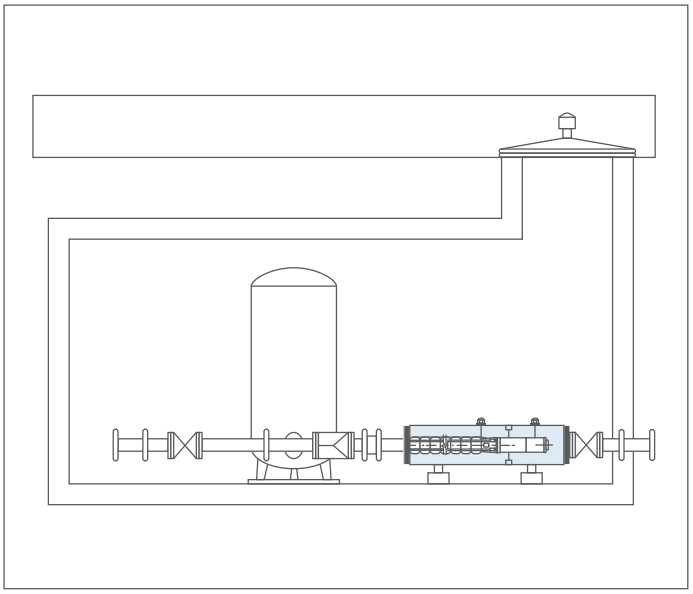

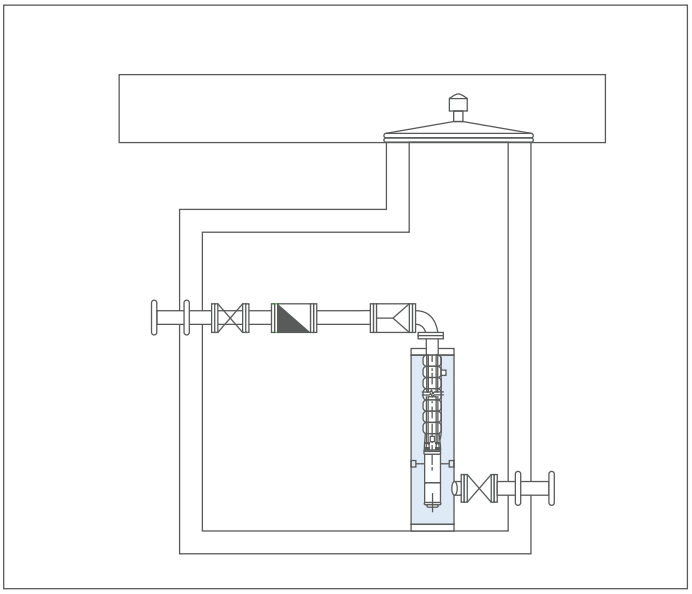

NOTES

NOTES